# AlphaServer 1000

# Service Guide

Order Number: EK–DTLSV–SV. B01

**Digital Equipment Corporation**
**Maynard, Massachusetts**

**First Printing, February 1995**
**Second Printing, July 1995**

Digital Equipment Corporation makes no representations that the use of its products in the manner described in this publication will not infringe on existing or future patent rights, nor do the descriptions contained in this publication imply the granting of licenses to make, use, or sell equipment or software in accordance with the description.

Possession, use, or copying of the software described in this publication is authorized only pursuant to a valid written license from Digital or an authorized sublicensor.

Copyright © Digital Equipment Corporation, 1995. All Rights Reserved.

The following are trademarks of Digital Equipment Corporation: AXP, DEC, DECchip, DEC VET, Digital, OpenVMS, StorageWorks, VAX DOCUMENT, the AXP logo, and the DIGITAL logo.

Digital UNIX is a registered trademark in the United States and other countries licensed exclusively through X/Open Company Ltd. Windows NT is a trademark of Microsoft Corp.

All other trademarks and registered trademarks are the property of their respective holders.

**FCC NOTICE:** The equipment described in this manual generates, uses, and may emit radio frequency energy. The equipment has been type tested and found to comply with the limits for a Class B computing device pursuant to Subpart J of Part 15 of FCC Rules, which are designed to provide reasonable protection against such radio frequency interference when operated in a commercial environment. Operation of this equipment in a residential area may cause interference, in which case the user at his own expense may be required to take measures to correct the interference.

S2920

This document was prepared using VAX DOCUMENT Version 2.1.

# Contents

**Preface** . . . . . xi

## 1 Troubleshooting Strategy

1.1 Troubleshooting the System . . . . . 1–1
1.1.1 Problem Categories . . . . . 1–2
1.2 Service Tools and Utilities . . . . . 1–7
1.3 Information Services . . . . . 1–9

## 2 Power-Up Diagnostics and Display

2.1 Interpreting Error Beep Codes . . . . . 2–2
2.1.1 SROM Memory Power-Up Tests . . . . . 2–3
2.2 Power-Up Screen . . . . . 2–7
2.2.1 Console Event Log . . . . . 2–8
2.3 Mass Storage Problems Indicated at Power-Up . . . . . 2–9
2.4 Storage Device LEDs . . . . . 2–11
2.5 EISA Bus Problems Indicated at Power-Up . . . . . 2–14
2.5.1 Additional EISA Troubleshooting Tips . . . . . 2–15
2.6 PCI Bus Problems Indicated at Power-Up . . . . . 2–16
2.7 Fail-Safe Loader . . . . . 2–17
2.7.1 Fail-Safe Loader Functions . . . . . 2–17
2.7.2 Activating the Fail-Safe Loader . . . . . 2–17
2.8 Power-Up Sequence . . . . . 2–19
2.8.1 AC Power-Up Sequence . . . . . 2–19
2.8.2 DC Power-Up Sequence . . . . . 2–20
2.9 Firmware Power-Up Diagnostics . . . . . 2–20
2.9.1 Serial ROM Diagnostics . . . . . 2–20
2.9.2 Console Firmware-Based Diagnostics . . . . . 2–21

## 3 Running System Diagnostics


3.1 Running ROM-Based Diagnostics . . . . . 3–1
3.2 Command Summary . . . . . 3–2
3.3 Command Reference . . . . . 3–3
3.3.1 test . . . . . 3–4
3.3.2 cat el and more el . . . . . 3–7
3.3.3 memory . . . . . 3–8
3.3.4 netew . . . . . 3–10
3.3.5 network . . . . . 3–12
3.3.6 net -s . . . . . 3–14
3.3.7 net -ic . . . . . 3–15
3.3.8 kill and kill_diags . . . . . 3–16
3.3.9 show_status . . . . . 3–17
3.4 Acceptance Testing and Initialization . . . . . 3–18
3.5 DEC VET . . . . . 3–18


## 4 Error Log Analysis


4.1 Fault Detection and Reporting . . . . . 4–1
4.1.1 Machine Check/Interrupts . . . . . 4–2
4.2 Error Logging and Event Log Entry Format . . . . . 4–4
4.3 Event Record Translation . . . . . 4–5
4.3.1 OpenVMS Translation Using DECevent . . . . . 4–5
4.3.2 Digital UNIX Translation Using DECevent . . . . . 4–6


## 5 System Configuration and Setup


5.1 Verifying System Configuration . . . . . 5–2
5.1.1 System Firmware . . . . . 5–2
5.1.2 Switching Between Interfaces . . . . . 5–4
5.1.3 Verifying Configuration: ARC Menu Options for Windows NT . . . . . 5–4
5.1.3.1 Display Hardware Configuration . . . . . 5–5
5.1.3.2 Set Default Variables . . . . . 5–7
5.1.4 Verifying Configuration: SRM Console Commands for DEC OSF/1 and OpenVMS . . . . . 5–9
5.1.4.1 show config . . . . . 5–9
5.1.4.2 show device . . . . . 5–11
5.1.4.3 show memory . . . . . 5–12
5.1.4.4 Setting and Showing Environment Variables . . . . . 5–12
5.2 System Bus Options . . . . . 5–17
5.2.1 CPU Daughter Board . . . . . 5–19

5.2.2 Memory Modules . . . . . 5–19
5.3 Motherboard . . . . . 5–20
5.4 EISA Bus Options . . . . . 5–21
5.5 ISA Bus Options . . . . . 5–21
5.5.1 Identifying ISA and EISA options . . . . . 5–22
5.6 EISA Configuration Utility . . . . . 5–22
5.6.1 Before You Run the ECU . . . . . 5–23
5.6.2 How to Start the ECU . . . . . 5–24
5.6.3 Configuring EISA Options . . . . . 5–25
5.6.4 Configuring ISA Options . . . . . 5–26
5.7 PCI Bus Options . . . . . 5–28
5.8 SCSI Buses . . . . . 5–28
5.8.1 Single Controller (On-Board) Configurations . . . . . 5–29
5.8.2 Multiple Controller Configurations . . . . . 5–32
5.9 Power Supply Configurations . . . . . 5–34
5.10 Console Port Configurations . . . . . 5–37

## 6 AlphaServer 1000 FRU Removal and Replacement

6.1 AlphaServer 1000 FRUs . . . . . 6–1
6.2 Removal and Replacement . . . . . 6–6
6.2.1 Cables . . . . . 6–8
6.2.2 CPU Daughter Board . . . . . 6–22
6.2.3 Fans . . . . . 6–23
6.2.4 StorageWorks Drive . . . . . 6–25
6.2.5 Internal StorageWorks Backplane . . . . . 6–26
6.2.6 Memory Modules . . . . . 6–28
6.2.7 Interlock Switch . . . . . 6–32
6.2.8 Motherboard . . . . . 6–33
6.2.9 NVRAM Chip (E14) and NVRAM TOY Clock Chip (E78) . . . . . 6–37
6.2.10 OCP Module . . . . . 6–37
6.2.11 Power Supply . . . . . 6–40
6.2.12 Speaker . . . . . 6–41
6.2.13 Removable Media . . . . . 6–42

## A Default Jumper Settings


A.1 Motherboard Jumpers . . . . . A–2
A.2 CPU Daughter Board (J3 and J4) Supported Settings . . . . A–4
A.3 CPU Daughter Board (J1 Jumper) . . . . . A–6


## Glossary

## Index

## Examples


5–1 Sample Hardware Configuration Display . . . . . 5–6


## Figures


2–1 Jumper J1 on the CPU Daughter Board . . . . . 2–6
2–2 AlphaServer 1000 Memory Layout . . . . . 2–7
2–3 StorageWorks Disk Drive LEDs (SCSI) . . . . . 2–12
2–4 Floppy Drive Activity LED . . . . . 2–12
2–5 CD–ROM Drive Activity LED . . . . . 2–13
2–6 Jumper J1 on the CPU Daughter Board . . . . . 2–18
5–1 System Architecture: AlphaServer 1000 . . . . . 5–2
5–2 Device Name Convention . . . . . 5–11
5–3 Card Cages and Bus Locations . . . . . 5–18
5–4 Memory Layout on the Motherboard . . . . . 5–20
5–5 ISA and ISA Boards . . . . . 5–22
5–6 PCI Board . . . . . 5–28
5–7 Single Controller Configuration with Dual Bus StorageWorks Shelf . . . . . 5–30
5–8 Single Controller Configuration with Single Bus StorageWorks Shelf . . . . . 5–31
5–9 Dual Controller Configuration with Single Bus StorageWorks Shelf . . . . . 5–32
5–10 Dual Controller Configuration with Dual Bus StorageWorks Shelf . . . . . 5–33
5–11 Power Supply Configurations . . . . . 5–35
5–12 Power Supply Cable Connections . . . . . 5–36

| | | |
|---|---|---|
| 6–1 | FRUs, Front Right | 6–4 |
| 6–2 | FRUs, Rear Left | 6–5 |
| 6–3 | Opening Front Door | 6–6 |
| 6–4 | Removing Top Cover and Side Panels | 6–7 |
| 6–5 | Floppy Drive Cable (34-Pin) | 6–8 |
| 6–6 | OCP Module Cable (10-Pin) | 6–9 |
| 6–7 | Power Cord | 6–10 |
| 6–8 | Power Supply Current Sharing Cable (3-Pin) | 6–11 |
| 6–9 | Power Supply DC Cable Assembly | 6–12 |
| 6–10 | Power Supply Storage Harness (12-Pin) | 6–13 |
| 6–11 | Interlock/Server Management Cable (2-pin) | 6–14 |
| 6–12 | Internal StorageWorks Jumper Cable (50-Pin) | 6–15 |
| 6–13 | SCSI (J15 StorageWorks Shelf to Bulkhead Connector or Bulkhead to Multinode) Cable (50-Pin) | 6–16 |
| 6–14 | SCSI (J15 StorageWorks Shelf to Bulkhead Connector or Bulkhead to Multinode) Cable (50-Pin) | 6–17 |
| 6–15 | SCSI (J1 or J14 StorageWorks Shelf to Bulkhead Connector) Cable (50-Pin) | 6–18 |
| 6–16 | SCSI (Embedded 8-bit) Multinode Cable (50-Pin) | 6–19 |
| 6–17 | SCSI RAID Internal Cable (50-Pin) (Single-Channel) | 6–20 |
| 6–18 | SCSI RAID Internal Cable (50-Pin) (Dual-Channel) | 6–21 |
| 6–19 | Removing CPU Daughter Board | 6–22 |
| 6–20 | Removing Fans | 6–24 |
| 6–21 | Removing StorageWorks Drive | 6–25 |
| 6–22 | Removing Power Supply | 6–26 |
| 6–23 | Removing Internal StorageWorks Backplane | 6–27 |
| 6–24 | Memory Layout on Motherboard | 6–28 |
| 6–25 | Removing SIMMs from Motherboard | 6–29 |
| 6–26 | Installing SIMMs on Motherboard | 6–30 |
| 6–27 | Removing the Interlock Safety Switch | 6–32 |
| 6–28 | Removing EISA and PCI Options | 6–33 |
| 6–29 | Removing CPU Daughter Board | 6–34 |
| 6–30 | Removing Motherboard | 6–35 |
| 6–31 | Motherboard Layout | 6–36 |
| 6–32 | Removing Front Door | 6–37 |
| 6–33 | Removing Front Panel | 6–38 |

6–34 Removing the OCP Module . . . . . 6–39
6–35 Removing Power Supply . . . . . 6–40
6–36 Removing Speaker . . . . . 6–41
6–37 Removing a CD–ROM Drive . . . . . 6–42
6–38 Removing a Tape Drive . . . . . 6–43
6–39 Removing a Floppy Drive . . . . . 6–44
A–1 Motherboard Jumpers (Default Settings) . . . . . A–2
A–2 AlphaServer 1000 4/200 CPU Daughter Board (Jumpers J3 and J4) . . . . . A–4
A–3 AlphaServer 1000 4/233 CPU Daughter Board (Jumpers J3 and J4) . . . . . A–5
A–4 CPU Daughter Board (J1 Jumper) . . . . . A–6

## Tables

1–1 Diagnostic Flow for Power Problems . . . . . 1–3
1–2 Diagnostic Flow for Problems Getting to Console Mode . . . . . 1–4
1–3 Diagnostic Flow for Problems Reported by the Console Program . . . . . 1–5
1–4 Diagnostic Flow for Boot Problems . . . . . 1–6
1–5 Diagnostic Flow for Errors Reported by the Operating System . . . . . 1–7
2–1 Interpreting Error Beep Codes . . . . . 2–2
2–2 SROM Memory Tests, CPU Jumper J1 . . . . . 2–4
2–3 Mass Storage Problems . . . . . 2–9
2–4 Troubleshooting Problems with SWXCR-xx RAID Controller . . . . . 2–11
2–5 EISA Troubleshooting . . . . . 2–14
2–6 PCI Troubleshooting . . . . . 2–16
3–1 Summary of Diagnostic and Related Commands . . . . . 3–2
4–1 AlphaServer 1000 Fault Detection and Correction . . . . 4–2
5–1 Listing the ARC Firmware Device Names . . . . . 5–5
5–2 ARC Firmware Device Names . . . . . 5–5
5–3 ARC Firmware Environment Variables . . . . . 5–8
5–4 Environment Variables Set During System Configuration . . . . . 5–13
5–5 Operating System Memory Requirements . . . . . 5–20

| | | |
|---|---|---|
| 5–6 | Summary of Procedure for Configuring EISA Bus (EISA Options Only) | 5–26 |
| 5–7 | Summary of Procedure for Configuring EISA Bus with ISA Options | 5–27 |
| 6–1 | AlphaServer 1000 FRUs | 6–2 |
| 6–2 | Power Cord Order Numbers | 6–10 |

# Preface

This guide describes the procedures and tests used to service AlphaServer 1000 systems. AlphaServer 1000 systems use a deskside ‘‘wide-tower’’ enclosure.

## Intended Audience

This guide is intended for use by Digital Equipment Corporation service personnel and qualified self-maintenance customers.

## Conventions

The following conventions are used in this guide:

| Convention | Meaning |
|---|---|
| Return | A key name enclosed in a box indicates that you press that key. |
| Ctrl/*x* | Ctrl/*x* indicates that you hold down the Ctrl key while you press another key, indicated here by *x*. In examples, this key combination is enclosed in a box, for example, Ctrl/C. |
| Warning | Warnings contain information to prevent personal injury. |
| Caution | Cautions provide information to prevent damage to equipment or software. |
| Note | A note calls the reader's attention to any information that may be of special importance. |
| `boot` | Console and operating system commands are shown in monospace type. |
| `[ ]` | In command format descriptions, brackets indicate optional elements. |
| `show config` | Console command abbreviations must be entered exactly as shown. Commands shown in lowercase can be entered in either uppercase or lowercase. |
| *italic type* | In console command sections, italic type indicates a variable. |
| < > | In console mode online help, angle brackets enclose a placeholder for which you must specify a value. |
| { } | In command descriptions, braces containing items separated by commas imply mutually exclusive items. |
| ❶ | Circled numbers provide a link between examples and text. |

## Related Documentation

- *AlphaServer 1000 Owner's Guide,* EK-DTLSV-OG
- *DEC Verifier and Exerciser Tool User's Guide,* AA-PTTMA-TE
- *Guide to Kernel Debugging,* AA-PS2TA-TE
- *OpenVMS AXP Alpha System Dump Analyzer Utility Manual,* AA-PV6UB-TE
- *DECevent Translation and Reporting Utility for OpenVMS User and Reference Guide*
- *DECevent Translation and Reporting Utility for Digital UNIX User and Reference Guide*
- *StorageWorks RAID Array 200 Subsystem Family Software User's Guide for OpenVMS Alpha,* AA-Q6WVA-TE

# 1
# Troubleshooting Strategy

This chapter describes the troubleshooting strategy for AlphaServer 1000 systems.

- Section 1.1 provides questions to consider before you begin troubleshooting an AlphaServer 1000 system.
- Tables 1–1 through 1–5 provide a diagnostic flow for each category of system problem.
- Section 1.2 lists the product tools and utilities.
- Section 1.3 lists available information services.

## 1.1 Troubleshooting the System

Before troubleshooting any system problem, check the site maintenance log for the system's service history. Be sure to ask the system manager the following questions:

- Has the system been used before and did it work correctly?
- Have changes to hardware or updates to firmware or software been made to the system recently?
- What is the state of the system—is the operating system running?

  If the operating system is down and you are not able to bring it up, use the console environment diagnostic tools, such as the power-up display and ROM-based diagnostics (RBDs).

  If the operating system is running, use the operating system environment diagnostic tools, such as error logs, crash dumps, and exercisers (DEC VET).

### 1.1.1 Problem Categories

System problems can be classified into the following five categories. Using these categories, you can quickly determine a starting point for diagnosis and eliminate the unlikely sources of the problem.

1. Power problems (Table 1–1)
2. No access to console mode (Table 1–2)
3. Console-reported failures (Table 1–3)
4. Boot failures (Table 1–4)
5. Operating system-reported failures (Table 1–5)

**Table 1–1 Diagnostic Flow for Power Problems**

| Symptom | Action |
|---|---|
| System does not power on. | |
| | • Check the power source and power cord.<br>• Check that the system's top cover is properly secured. A safety interlock switch shuts off power to the system if the top cover is removed.<br>• If there are two power supplies, make sure both power supplies are plugged in.<br>• Check the On/Off switch setting on the operator control panel.<br>• Check that the ambient room temperature is within environmental specifications (10–40°C, 50–104°F).<br>• Check that internal power supply cables are plugged in at both the power supply and system motherboard (Section 5.9). |
| Power supply shuts down after a few seconds (fan failure). | Using a flashlight, look through the front (to the left of the internal StorageWorks shelf) to determine if the fans are spinning at power-up. A failure of either fan causes the system to shut down after a few seconds. |

**Table 1–2 Diagnostic Flow for Problems Getting to Console Mode**

| Symptom | Action |
|---|---|
| Power-up screen is not displayed. | Interpret the error beep codes at power-up (Section 2.1) for a failure detected during self-tests. |
| | Check that the keyboard and monitor are properly connected and turned on. |
| | If the power-up screen is not displayed, yet the system enters console mode when you press Return, check that the `console` environment variable is set correctly. If you are using a VGA console terminal, the console variable should be set to ''graphics.'' If you are using a serial console terminal, the console variable should be set to ''serial.'' |
| | If a VGA controller other than the standard on-board VGA controller is being used, refer to Section 5.10 for more information. |
| | If `console` is set to serial, the power-up screen is routed to the COM1 serial communication port (Section 5.10) and cannot be viewed from the VGA monitor. |
| | Try connecting a console terminal to the COM1 serial communication port (Section 5.10). If necessary use an MMJ-to-9-pin adapter (H8571-J). Check the baud rate setting for the console terminal and the system. The system baud rate setting is 9600. When using the COM1 port, you must set the `console` environment variable to ''serial.'' |
| | For certain situations, power up using the fail-safe loader (Section 2.7) to load new console firmware from a diskette. |

**Table 1–3 Diagnostic Flow for Problems Reported by the Console Program**

| Symptom | Action |
|---|---|
| Power-up tests do not complete. | Interpret the error beep codes at power-up (Section 2.1) and check the power-up screen (Section 2.2) for a failure detected during self-tests.<br><br>If the power-up display stops on e6, an EISA or PCI board is causing the system to hang. |
| Console program reports error:<br><br>• Error beep codes report an error at power-up.<br><br>• Power-up screen includes error messages. | Use the error beep codes (Section 2.1) and/or console terminal (Section 2.2) to determine the error.<br><br>Examine the console event log (enter the `cat el` command) (Section 2.2.1) or the power-up screen (Section 2.2) to check for embedded error messages recorded during power-up.<br><br>If the power-up screen or console event log indicates problems with mass storage devices, or if storage devices are missing from the `show config` display, use the troubleshooting tables (Section 2.3) to determine the problem.<br><br>If the power-up screen or console event log indicates problems with EISA devices, or if EISA devices are missing from the `show config` display, use the troubleshooting table (Section 2.5) to determine the problem.<br><br>If the power-up screen or console event log indicates problems with PCI devices, or if PCI devices are missing from the `show config` display, use the troubleshooting table (Section 2.6) to determine the problem.<br><br>Run the ROM-based diagnostic (RBD) tests (Section 3.1) to verify the problem. |

**Table 1–4 Diagnostic Flow for Boot Problems**

| Symptom | Action |
|---|---|
| System cannot find boot device. | Check the system configuration for the correct device parameters (node ID, device name, and so on).<br>• For DEC OSF/1 and OpenVMS, use the `show config` and `show device` commands (Section 5.1).<br>• For Windows NT, use the Display Hardware Configuration display and the Set Default Environment Variables display (Section 5.1).<br>Check the system configuration for the correct environment variable settings.<br>• For DEC OSF/1 and OpenVMS, examine the auto_action, bootdef_dev, boot_osflags, and os_type environment variables (Section 5.1.4.4).<br>For problems booting over a network, check the ew*0_protocols or er*0_protocols environment variable settings: Systems booting from a DEC OSF/1 server should be set to bootp; systems booting from an OpenVMS server should be set to mop (Section 5.1.4.4).<br>• For Windows NT, examine the FWSEARCHPATH, AUTOLOAD, and COUNTDOWN environment variables (Section 5.1.4.4). |
| Device does not boot. | For problems booting over a network, check the ew*0_ protocols or er*0_protocols environment variable settings: Systems booting from a DEC OSF/1 server should be set to bootp; systems booting from an OpenVMS server should be set to mop (Section 5.1.4.4).<br>Run the device tests (Section 3.1) to check that the boot device is operating. |

**Table 1–5 Diagnostic Flow for Errors Reported by the Operating System**

| Symptom | Action |
|---|---|
| System is hung or has crashed. | Examine the crash dump file. |
| | Refer to *OpenVMS AXP Alpha System Dump Analyzer Utility Manual* for information on how to interpret OpenVMS crash dump files. |
| | Refer to the *Guide to Kernel Debugging* (AA–PS2TA–TE) for information on using the DEC OSF/1 Krash Utility. |
| Errors have been logged and the operating system is up. | Examine the operating system error log files to isolate the problem. |
| | If the problem occurs intermittently, run an operating system exerciser, such as DEC VET, to stress the system. |
| | Refer to the *DEC Verifier and Exerciser Tool User's Guide* (AA–PTTMA–TE) for instructions on running DEC VET. |

## 1.2 Service Tools and Utilities

This section lists the array of service tools and utilities available for acceptance testing, diagnosis, and serviceability and provides recommendations for their use.

### Error Handling/Logging

DEC OSF/1, OpenVMS, and Microsoft Windows NT operating systems provide recovery from errors, fault handling, and event logging. The DECevent Translation and Reporting Utility for OpenVMS and Error Report Formatter (ERF) provides bit-to-text translation of event logs for interpretation. DEC OSF/1 uses uerf to present the same kinds of information.

RECOMMENDED USE: Analysis of error logs is the primary method of diagnosis and fault isolation. If the system is up, or you are able to bring it up, look at this information first.

### ROM-Based Diagnostics (RBDs)

Many ROM-based diagnostics and exercisers are embedded in AlphaServer 1000 systems. ROM-based diagnostics execute automatically at power-up and can be invoked in console mode using console commands.

RECOMMENDED USE: ROM-based diagnostics are the primary means of testing the console environment and diagnosing the CPU, memory, Ethernet, I/O buses, and SCSI subsystems. Use ROM-based diagnostics in the acceptance test procedures when you install a system, add a memory module, or replace the following: CPU module, memory module, motherboard, I/O bus device, or storage device. Refer to Chapter 3 for information on running ROM-based diagnostics.

### Loopback Tests

Internal and external loopback tests are used to isolate a failure by testing segments of a particular control or data path. The loopback tests are a subset of the ROM-based diagnostics.

RECOMMENDED USE: Use loopback tests to isolate problems with the COM2 serial port, the parallel port, and Ethernet controllers. Refer to Chapter 3 for instructions on performing loopback tests.

### Firmware Console Commands

Console commands are used to set and examine environment variables and device parameters, as well as to invoke ROM-based diagnostics and exercisers. For example, the `show memory`, `show configuration`, and `show device` commands are used to examine the configuration; the `set` (bootdef_ dev, auto_action, and boot_osflags) commands are used to set environment variables; and the `cdp` command is used to configure DSSI parameters.

RECOMMENDED USE: Use console commands to set and examine environment variables and device parameters and to run RBDs. Refer to Section 5.1 for information on configuration-related firmware commands and Chapter 3 for information on running RBDs.

### Operating System Exercisers (DEC VET)

The Digital Verifier and Exerciser Tool (DEC VET) is supported by the DEC OSF/1, OpenVMS, and Windows NT operating systems. DEC VET performs exerciser-oriented maintenance testing of both hardware and operating system.

RECOMMENDED USE: Use DEC VET as part of acceptance testing to ensure that the CPU, memory, disk, tape, file system, and network are interacting properly. Also use DEC VET to stress test the user's environment and configuration by simulating system operation under heavy loads to diagnose intermittent system failures.

### Crash Dumps

For fatal errors, such as fatal bugchecks, DEC OSF/1 and OpenVMS operating systems will save the contents of memory to a crash dump file.

RECOMMENDED USE: Crash dump files can be used to determine why the system crashed. To save a crash dump file for analysis, you need to know the proper system settings. Refer to the *OpenVMS AXP Alpha System Dump Analyzer Utility Manual* (AA-PV6UB-TE) or the *Guide to Kernel Debugging* (AA–PS2TA–TE) for DEC OSF/1.

## 1.3 Information Services

Several information resources are available, including online information for servicers and customers, computer-based training, and maintenance documentation database services. A brief description of some of these resources follows.

### Training

The following Computer Based Training (CBT) and lecture lab courses are available from the Digital training center:

- Alpha Concepts
- ISA and EISA Bus Concepts: EY-I113E-P0
- RAID Concepts: EY-N935E
- SCSI Concepts and Troubleshooting: EY-P841E, EY-N838E

### Digital Assisted Services

Digital Assisted Services (DAS) offers products, services, and programs to customers who participate in the maintenance of Digital computer equipment. Components of Digital assisted services include:

- Spare parts and kits
- Diagnostics and service information/documentation
- Tools and test equipment
- Parts repair services, including Field Change Orders

# 2

# Power-Up Diagnostics and Display

This chapter provides information on how to interpret error beep codes and the power-up display on the console screen. In addition, a description of the power-up and firmware power-up diagnostics is provided as a resource to aid in troubleshooting.

- Section 2.1 describes how to interpret error beep codes at power-up.
- Section 2.1.1 describes SROM memory tests that can be run at power-up to isolate failing SIMM memory.
- Section 2.2 describes how to interpret the power-up screen display.
- Section 2.3 describes how to troubleshoot mass-storage problems indicated at power-up or storage devices missing from the `show config` display.
- Section 2.4 shows the location of storage device LEDs.
- Section 2.5 describes how to troubleshoot EISA bus problems indicated at power-up or EISA devices missing from the `show config` display.
- Section 2.6 describes how to troubleshoot PCI bus problems indicated at power-up or PCI devices missing from the `show config` display.
- Section 2.7 describes the use of the fail-safe loader.
- Section 2.8 describes the power-up sequence.
- Section 2.9 describes power-on self-tests.

## 2.1 Interpreting Error Beep Codes

If errors are detected at power-up, audible beep codes are emitted from the system. For example, if the SROM code could not find any good memory, you would hear a 1-3-3 beep code (one beep, a pause, a burst of three beeps, a pause, and another burst of three beeps).

The beep codes are the primary diagnostic tool for troubleshooting problems when console mode cannot be accessed. Refer to Table 2–1 for information on interpreting error beep codes.

**Table 2–1 Interpreting Error Beep Codes**

| Beep Code | Problem | Corrective Action |
|---|---|---|
| 1-1-4 | The SROM code is unable to load the console code: Flash ROM header area or checksum error detected. | 1. Use the Fail-Safe Loader to load new ARC/SRM console code (Section 2.7).<br>2. If successfully loading new console firmware does not solve the problem, replace the motherboard (Chapter 6). |
| 3-3-1 | Generic system failure. Possible problem sources include the following motherboard components: native SCSI controller (NCR 53C810), remote I/O chip (Intel 87312), or NVRAM chip (position E14). | 1. Replace the NVRAM chip (E14) on system motherboard (Chapter 6.)<br>2. If replacing the NVRAM chip did not solve the problem, replace the motherboard (Chapter 6). |
| 1-2-1 | TOY NVRAM failure. | Replace the TOY NVRAM chip (E78) on system motherboard (Chapter 6). |

(continued on next page)

**Table 2–1 (Cont.) Interpreting Error Beep Codes**

| Beep Code | Problem | Corrective Action |
|---|---|---|
| 1-3-3 | No usable memory detected. | 1. Verify that the memory modules are properly seated and try powering up again.<br>2. Swap bank 0 memory with known good memory and run SROM memory tests at power-up (Section 2.1.1).<br>3. If populating bank 0 with known good memory does not solve the problem, replace the CPU daughter board (Chapter 6).<br>4. If replacing the CPU daughter board does not solve the problem, replace the motherboard (Chapter 6). |

## 2.1.1 SROM Memory Power-Up Tests

To test SIMM memory and report the position of a failing SIMM, set SROM power-up tests by using jumper J1 (Figure 2–1) on the CPU daughter board. The progress and results of these tests are reported on the LCD display on the operator control panel (OCP).

To thoroughly test memory and data paths, complete the SROM tests in the order presented in Table 2–2. If a SIMM is reported bad, replace the SIMM (Chapter 6) and resume testing at bank 4 (Memory Test).

**Table 2–2 SROM Memory Tests, CPU Jumper J1**

| Bank # | Test Description | Test Results |
|---|---|---|
| 6 | Backup Cache Tag Test | Test status displays on OCP:<br>`1.2.3.done.`<br>If the tests take longer than a few seconds between each number displayed in the test count, there is a problem with the cache—replace the CPU daughter board (Chapter 6). |
| 2 | Cache Test: Tests backup cache. | Test status displays on OCP:<br>`....done.`<br>If the test takes longer than a few seconds to complete, there is a problem with the backup cache—replace the CPU daughter board (Chapter 6). |
| 4 | Memory Test: Tests memory with backup and data cache disabled. | Test status displays on OCP:<br>`12345.done.`<br>If an error is detected, the bank number and failing SIMM position are displayed. The following OCP message indicates a failing SIMM at bank 0, SIMM position 2.<br>`FAIL B:0 S:2`<br>Test duration: Approximately 10 seconds per 8 megabytes of memory.<br>Figure 2–2 shows the bank and SIMM layout for AlphaServer 1000 systems. After determining the bad SIMM, refer to Chapter 6 for instructions on replacing FRUs.<br>Note: The memory tests do not test the ECC SIMMs. If the operating system logs five or more single-bit correctible errors, swap the suspected ECC SIMMs with good SIMMs and repeat the memory test. |

(continued on next page)

**Table 2–2 (Cont.) SROM Memory Tests, CPU Jumper J1**

| Bank # | Test Description | Test Results |
|---|---|---|
| 5 | Memory Test, Cache Enabled: Tests memory with backup and data cache enabled. | Test status displays on OCP:<br>`12345.done.`<br>If an error is detected, the bank number and failing SIMM position are displayed. The following OCP message indicates a failing SIMM at bank 0, SIMM position 2.<br>`FAIL B:0 S:2`<br>Test duration: Approximately 2 seconds per 8 megabytes of memory.<br>Figure 2–2 shows the bank and SIMM layout for AlphaServer 1000 systems. After determining the bad SIMM, refer to Chapter 6 for instructions on replacing FRUs.<br>Note: The memory tests do not test the ECC SIMMs. If the operating system logs five or more single-bit correctible errors, swap the suspected ECC SIMMs with good SIMMs and repeat the memory test. |
| 3 | Backup Cache Test: Tests backup cache alternatively with data cache enabled then disabled. | Test status displays on OCP:<br>`d 12345.done.`<br>`D 12345.done.`<br>`D 12345.done.`<br>`d 12345.done.`<br>If an error is detected, the bank number and failing SIMM position are displayed. The following OCP message indicates a failing SIMM at bank 0, SIMM position 2.<br>`FAIL B:0 S:2`<br>Test duration: Approximately 2 seconds per 8 megabytes of memory.<br>Figure 2–2 shows the bank and SIMM layout for AlphaServer 1000 systems. After determining the bad SIMM, refer to Chapter 6 for instructions on replacing FRUs.<br>Note: The memory tests do not test the ECC SIMMs. If the operating system logs five or more single-bit correctible errors, swap the suspected ECC SIMMs with good SIMMs and repeat the memory test. |

**Figure 2–1 Jumper J1 on the CPU Daughter Board**

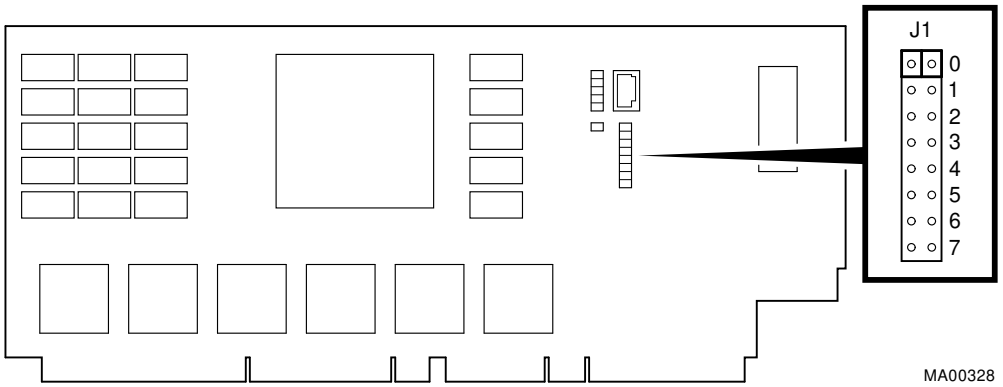


| Bank | Jumper Setting |
|---|---|
| 0 | Standard boot setting (default) |
| 1 | Mini-console setting: Internal use only |
| 2 | SROM CacheTest: backup cache test |
| 3 | SROM BCacheTest: backup cache and memory test |
| 4 | SROM memTest: memory test with backup and data cache disabled |
| 5 | SROM memTestCacheOn: memory test with backup and data cache enabled |
| 6 | SROM BCache Tag Test: backup cache tag test |
| 7 | Fail-Safe Loader setting: selects fail-safe loader firmware |

**Figure 2–2 AlphaServer 1000 Memory Layout**

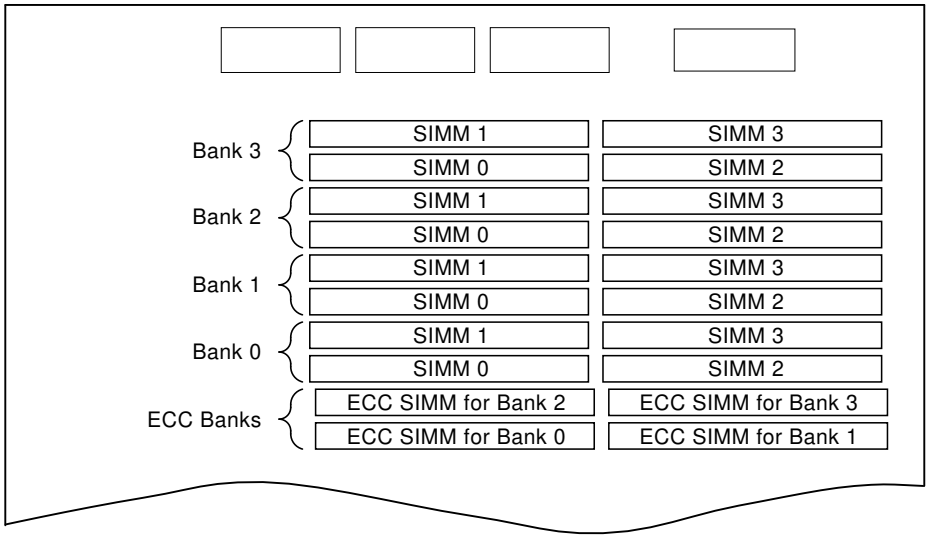


## 2.2 Power-Up Screen

During power-up self-tests, the test status and result are displayed on the console terminal. Information similar to the following example should be displayed on the screen.

```
ff.fe.fd.fc.fb.fa.f9.f8.f7.f6.f5.
ef.df.ee.f4.ed.ec.eb.....ea.e9.e8.e7.e6.e5.e4.e3.e2.e1.e0.
V1.1-1, built on Nov  4 1994 at 16:44:07
>>>
```

**Note**

If the power-up display stops on e6, an EISA or PCI board is causing the system to hang.

### DEC OSF/1 or OpenVMS Systems

DEC OSF/1 and OpenVMS operating systems are supported by the SRM firmware (see Section 5.1.1). The SRM console prompt follows:

```
>>>
```

### Windows NT Systems

The Windows NT operating system is supported by the ARC firmware (see Section 5.1.1). Systems using Windows NT power up to the ARC boot menu as follows:

```
ARC Multiboot Alpha AXP Version n.nn
Copyright (c) 1994 Microsoft Corporation
Copyright (c) 1994  Digital Equipment Corporation

Boot menu:

   Boot Windows NT
   Boot an alternate operating system
   Run a program
   Supplementary menu...

Use the arrow keys to select, then press Enter.
```

## 2.2.1 Console Event Log

AlphaServer 1000 systems maintain a console event log consisting of status messages received during power-on self-tests. If problems occur during power-up, standard error messages indicated by asterisks (***) may be embedded in the console event log. To display a console event log, use the `cat el` command.

**Note**

To stop the screen display from scrolling, press Ctrl/S. To resume scrolling, press Ctrl/Q.

You can also use the command, `more el`, to display the console event log one screen at a time.

The following example shows a console event log that contains a standard error message:

❶ The keyboard is not plugged in or is not working.

```
>>> cat el
*** keyboard not plugged in...  ❶
ff.fe.fd.fc.fb.fa.f9.f8.f7.f6.f5.
ef.df.ee.f4.ed.ec.eb.ea.e9.e8.e7.e6.port pka0.7.0.6.0 initialized,
scripts are at 4f7faa0
resetting the SCSI bus on pka0.7.0.6.0
port pkb0.7.0.12.0 initialized, scripts are at 4f82be0
resetting the SCSI bus on pkb0.7.0.12.0
e5.e4.e3.e2.e1.e0.
V1.1-1, built on Nov  4 1994 at 16:44:07
device dka400.4.0.6.0 (RRD43) found on pka0.4.0.6.0
>>>
```

## 2.3 Mass Storage Problems Indicated at Power-Up

Mass storage failures at power-up are usually indicated by read fail messages. Other problems are indicated by storage devices missing from the `show config` display.

- Table 2–3 provides information for troubleshooting mass storage problems indicated at power-up or storage devices missing from the `show config` display.
- Table 2–4 provides troubleshooting tips for AlphaServer systems that use the SWXCR-xx controller.
- Section 2.4 provides information on storage device LEDs.

Use Tables 2–3 and 2–4 to diagnose the likely cause of the problem.

**Table 2–3 Mass Storage Problems**

| Problem | Symptom | Corrective Action |
|---|---|---|
| Drive failure | Fault LED for drive is on (steady) (Section 2.4). | Replace drive. |
| Duplicate SCSI IDs | Drives with duplicate SCSI IDs are missing from the `show config` display. | Correct SCSI IDs. May need to reconfigure internal StorageWorks backplane (Section 5.8). |
| SCSI ID set to 7 (reserved for host ID) | Valid drives are missing from the `show config` display.<br>One drive may appear seven times on the `show config` display. | Correct SCSI IDs. |
| Duplicate host IDs on a shared bus | Valid drives are missing from the `show config` display.<br>One drive may appear seven times on the `show config` display. | Change host ID through the pk*0_host_id environment variable (`set pk*0_host_id`). |
| Missing or loose cables. Drives not properly seated on StorageWorks shelf | Activity LEDs do not come on. Drive missing from the `show config` display. | Remove device and inspect cable connections. Reseat drive on StorageWorks shelf. |

(continued on next page)

**Table 2–3 (Cont.) Mass Storage Problems**

| Problem | Symptom | Corrective Action |
|---|---|---|
| SCSI bus length exceeded | Drives may disappear intermittently from the `show config` and `show device` displays. | A SCSI bus extended to the internal StorageWorks shelf with the backplane configured as a single bus, cannot be extended outside of the enclosure.<br>A SCSI bus extended to the internal StorageWorks shelf with the backplane configured as a dual bus, can be extended 1 meter outside of the enclosure.<br>The entire SCSI bus length, from terminator to terminator, must not exceed 5 meters for single-ended SCSI-2 at 5 MB/sec, or 3 meters for single-ended SCSI-2 at 10 MB/sec. |
| Terminator missing or wrong terminator used | Read/write errors in the console event log; storage adapter port may fail. | Attach appropriate terminators as needed (external SCSI terminator for use with the SWXCR-xx RAID controller, 12-41667-02; external SCSI terminator for native controller, 12-37004-04 or 12-41667-02).<br>Note: The SCSI terminator jumper (J49) on the system motherboard should be set to ''on'' to enable the onboard SCSI termination. |
| Extra terminator | Devices produce errors or device IDs are dropped. | Check that bus is terminated only at beginning and end. Remove unnecessary terminators.<br>Note: The SCSI terminator jumper (J49) on the system motherboard should be set to ''on'' to enable the onboard SCSI termination. |
| SCSI storage controller failure | Problems persist after eliminating the problem sources. | Replace failing EISA or PCI storage adapter module (or motherboard for the native SCSI controller). |

**Table 2–4 Troubleshooting Problems with SWXCR-xx RAID Controller**

| Symptom | Action |
|---|---|
| Some RAID drives do not appear on the `show device d` display. | Valid configured RAID logical drives will appear as DRA0–DRA*n*, not as DK*n*. Configure the drives by running the RAID Configuration Utility (RCU). Follow the instructions in the *StorageWorks RAID Array 200 Subsystem Family Installation and Configuration Guide*, EK-SWRA2-IG.<br>Reminder: Several physical disks can be grouped as a single logical DRA*n* device.<br>External SCSI terminators used with the SWXCR controller must be of the following type: 12-41667-02. |
| Drives on the SWXCR controller power up with the amber Fault light on. | Whenever you move drives onto or off of the SWXCR controller, run the RAID Configuration Utility to set up the drives and logical units. Follow the instructions in the *StorageWorks RAID Array 200 Subsystem Family Installation and Configuration Guide.*<br>External SCSI terminators used with the SWXCR controller must be of the following type: 12-41667-02. |
| Image copy of DRA logical drive does not boot (OpenVMS AXP systems only). | If you copy the contents of a system disk to your RAID subsystem using the BACKUP/IMAGE command, for example, you will need to repeat several steps in the data device installation procedure, as described in the *StorageWorks RAID Array 200 Subsystem Family Software User's Guide for OpenVMS AXP*, AA-Q6WVA-TE, in order to make the second device a bootable device. |

## 2.4 Storage Device LEDs

Storage device LEDs indicate the status of the device.

- Figure 2–3 shows the LEDs for disk drives contained in a StorageWorks shelf. A failure is indicated by the Fault light on each drive.
- Figure 2–4 shows the Activity LED for the floppy drive. This LED is on when the drive is in use.
- Figure 2–5 shows the Activity LED for the CD–ROM drive. This LED is on when the drive is in use.

For information on other storage devices, refer to the documentation provided by the manufacturer or vendor.

**Figure 2–3 StorageWorks Disk Drive LEDs (SCSI)**

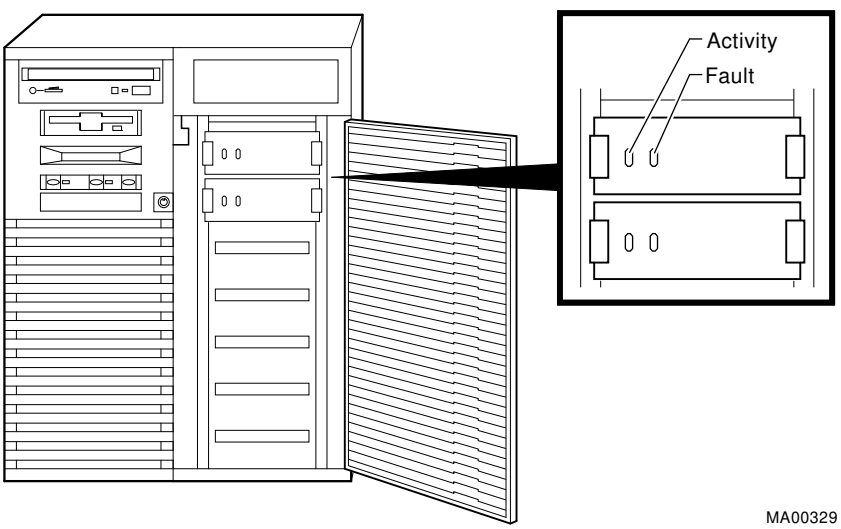


**Figure 2–4 Floppy Drive Activity LED**

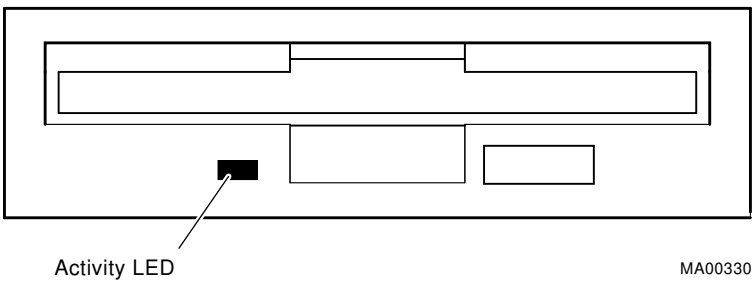

**Figure 2–5 CD–ROM Drive Activity LED**

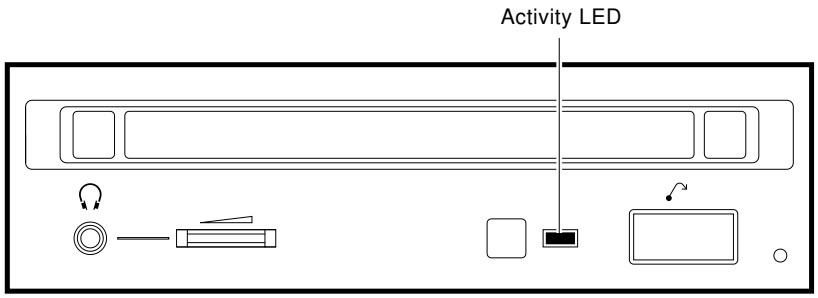

## 2.5 EISA Bus Problems Indicated at Power-Up

EISA bus failures at power-up are usually indicated by the following messages displayed during power-up:

```
EISA Configuration Error. Run the EISA Configuration Utility.
```

Run the EISA Configuration Utility (ECU) (Section 5.4) when this message is displayed. Other problems are indicated by EISA devices missing from the `show config` display.

Table 2–5 provides steps for troubleshooting EISA bus problems that persist after you run the ECU.

**Table 2–5 EISA Troubleshooting**

| Step | Action |
|---|---|
| 1 | Confirm that the EISA module and any cabling are properly seated. |
| 2 | Run the ECU to:<br>• Confirm that the system has been configured with the most recently installed controller.<br>• See what the hardware jumper and switch setting should be for each ISA controller.<br>• See what the software setting should be for each ISA and EISA controller.<br>• See if the ECU deactivated (<>) any controllers to prevent conflict.<br>• See if any controllers are locked (!), which limits the ECU's ability to change resource assignments. |
| 3 | Confirm that the hardware jumpers and switches on ISA controllers reflect the settings indicated by the ECU. Start with the last ISA module installed. |
| 4 | Run ROM-based diagnostics for the type of option:<br>• Storage adapter—Run `test` to exercise the storage devices off the EISA controller option (Section 3.3.1).<br>• Ethernet adapter—Run `netew` or `network` to exercise an Ethernet adapter (Section 3.3.4, Section 3.3.5). |
| 5 | Check for a bad slot by moving the last installed controller to a different slot. |
| 6 | Call the option manufacturer or support for help. |

### 2.5.1 Additional EISA Troubleshooting Tips

The following tips can aid in isolating EISA bus problems.

- Peripheral device controllers need to be seated (inserted) carefully, but firmly, into their slot to make all necessary contacts. Improper seating is a common source of problems for EISA modules.
- Be sure you run the correct version of ECU for the operating system. For windows NT, use ECU diskette DECpc AXP (AK-PYCJ*-CA); for DEC OSF/1 and OpenVMS, use ECU diskette DECpc AXP (AK-Q2CR*-CA).
- The CFG files supplied with the option you want to install may not work on AlphaServer 1000 systems. Some CFG files call overlay files that are not required on this system or may reference inappropriate system resources, for example, BIOS addresses. Contact the option vendor to obtain the proper CFG file.
- Peripherals cannot share direct memory access (DMA) channels. Assignment of more than one peripheral to the same DMA channel can cause unpredictable results or even loss of function of the EISA module.
- Systems running Windows NT can assign shared interrupt lines (IRQs). DEC OSF/1 and OpenVMS do not allow shared interrupts.
- Not all EISA products work together. EISA is an open standard, and not every EISA product or combination of products can be tested. Violations of specifications may matter in some configurations, but not in others.

  Manufacturers of EISA options often test the most common combinations and may have a list of ISA and EISA options that do not function in combination with particular systems. Be sure to check the documentation or contact the option vendor for the most up-to-date information.
- EISA systems will not function unless they are first configured using the ECU.
- The ECU will not notify you if the configuration program diskette is write-protected when it attempts to write the system configuration file (system.sci) to the diskette.

## 2.6 PCI Bus Problems Indicated at Power-Up

PCI bus failures at power-up are usually indicated by the inability of the system to see the device. Table 2–6 provides steps for troubleshooting PCI bus problems. Use the table to diagnose the likely cause of the problem.

**Note**

Some PCI devices do not implement PCI parity, and some have a parity-generating scheme in which parity is sometimes incorrect or is not compliant with the PCI Specification. In such cases, the device functions properly as long as parity is not checked. The pci_parity environment variable for the SRM console, or the DISABLEPCIPARITY CHECKING for the ARC console, allow you to turn off parity checking so that false PCI parity errors do not result in machine check errors.

When you disable PCI parity, no parity checking is implemented for any PCI device, even those devices that produce correct, compliant parity.

**Table 2–6 PCI Troubleshooting**

| Step | Action |
|---|---|
| 1 | Confirm that the PCI module and any cabling are properly seated. |
| 2 | Run ROM-based diagnostics for the type of option:<br>• Storage adapter—Run `test` to exercise the storage devices off the PCI controller option (Section 3.3.1).<br>• Ethernet adapter—Run `netew` or `network` to exercise an Ethernet adapter (Section 3.3.4, Section 3.3.5). |
| 3 | Check for a bad slot by moving the last installed controller to a different slot. |
| 4 | Call the option manufacturer or support for help. |

## 2.7 Fail-Safe Loader

The fail-safe loader (FSL) allows you to attempt to recover when one of the following is the cause of a problem getting to the console program under normal power-up:

- A power failure or accidental power down during a firmware upgrade
- A checksum failure or flash ROM header error while the SROM code is trying to load the SRM/ARC console firmware

**Note**

The fail-safe loader should be used only when a failure at power-up prohibits you from getting to the console program. You cannot boot an operating system from the fail-safe loader.

If a checksum error is detected when the SRM/ARC console is loading at power-up (error beep code 1-1-4), you need to activate the fail-safe loader and reinstall the firmware.

### 2.7.1 Fail-Safe Loader Functions

From the FSL program, you can update or load new console firmware.

### 2.7.2 Activating the Fail-Safe Loader

To activate the FSL:

1. Install the jumper at bank 7 of the J1 jumper on the CPU daughter board (Figure 2–6). The jumper is normally installed in the standard boot setting (bank 0).
2. Install the console firmware floppy diskette and turn on the system.
3. Reinstall the console firmware from a firmware diskette.
4. When you have finished, power down and return the J1 jumper to the standard boot setting (bank 0).

**Figure 2–6 Jumper J1 on the CPU Daughter Board**

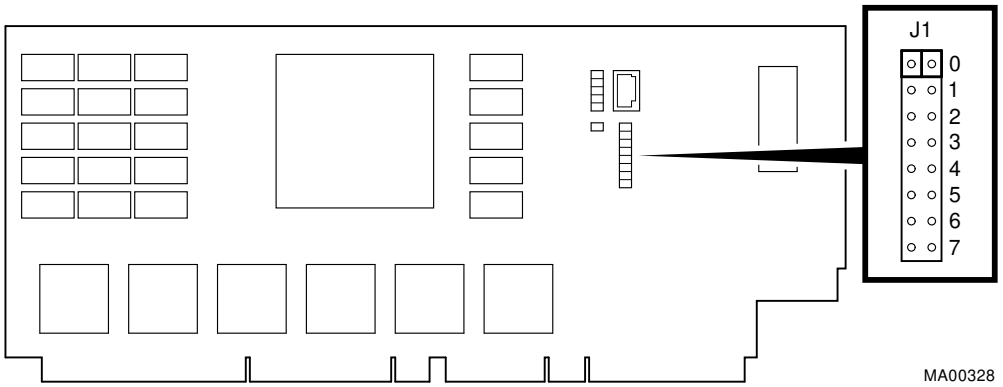


| Bank | Jumper Setting |
|---|---|
| 0 | Standard boot setting (default) |
| 1 | Mini-console setting: Internal use only |
| 2 | SROM CacheTest: backup cache test |
| 3 | SROM BCacheTest: backup cache and memory test |
| 4 | SROM memTest: memory test with backup and data cache disabled |
| 5 | SROM memTestCacheOn: memory test with backup and data cache enabled |
| 6 | SROM BCache Tag Test: backup cache tag test |
| 7 | Fail-Safe Loader setting: selects fail-safe loader firmware |

## 2.8 Power-Up Sequence

During the AlphaServer 1000 power-up sequence, the power supplies are stabilized and the system is initialized and tested through the firmware power-on self-tests.

The power-up sequence includes the following:

- Power supply power-up:
  - AC power-up
  - DC power-up
- Two sets of power-on diagnostics:
  - Serial ROM diagnostics
  - Console firmware-based diagnostics

**Caution**

The AlphaServer 1000 enclosure will not power up if the top cover is not securely attached. Removing the top cover will cause the system to shut down.

### 2.8.1 AC Power-Up Sequence

The following power-up sequence occurs when AC power is applied to the system (system is plugged in) or when electricity is restored after a power outage:

1. The front end of the power supply begins operation and energizes.
2. The power supply then waits for the DC power to be enabled.

**Note**

The top cover and side panels must be securely installed. A safety interlock prevents the system from being powered on with the cover and panels removed.

### 2.8.2 DC Power-Up Sequence

DC power is applied to the system with the DC On/Off button on the operator control panel.

A summary of the DC power-up sequence follows:

1. When the DC On/Off button is pressed, the power supply checks for a POK_H condition.
2. 12V, 5V, 3.3V, and -12V outputs are energized and stabilized. If the outputs do not come into regulation, the power-up is aborted and the power supply enters the latching-shutdown mode.

## 2.9 Firmware Power-Up Diagnostics

After successful completion of AC and DC power-up sequences, the processor performs its power-up diagnostics. These tests verify system operation, load the system console, and test the core system (CPU, memory, and motherboard), including all boot path devices. These tests are performed as two distinct sets of diagnostics:

1. Serial ROM diagnostics—These tests are loaded from the serial ROM located on the CPU daughter board into the CPU's instruction cache (I-cache). The tests check the basic functionality of the system and load the console code from the FEPROM on the motherboard into system memory.

   Failures during these tests are indicated by audible error beep codes. Failures of customized SROM tests, set using the J1 jumper on the CPU daughter board, are displayed on the operator control panel.

2. Console firmware-based diagnostics—These tests are executed by the console code. They test the core system, including all boot path devices.

   Failures during these tests are reported to the console terminal through the power-up screen or console event log.

### 2.9.1 Serial ROM Diagnostics

The serial ROM diagnostics are loaded into the CPU's instruction cache from the serial ROM on the CPU daughter board. The diagnostics test the system in the following order:

1. Test the CPU and backup cache located on the CPU daughter board.
2. Test the CPU module's system bus interface.
3. Test the system bus to PCI bus bridge and system bus to EISA bus bridge. If the PCI bridge fails or EISA bridge fails, an audible error beep code sounds. The power-up tests continue despite these errors.

4. Configure the memory in the system and test only the first 4 MB of memory. If there is more than one memory module of the same size, the lowest numbered memory module (one closest to the CPU) is tested first.

   If the memory test fails, the failing bank is mapped out and memory is reconfigured and re-tested. Testing continues until good memory is found. If good memory is not found, an error beep code (1-3-3) is generated and the power-up tests are terminated.

5. Check the data path to the FEPROMs on the motherboard.

6. The console program is loaded into memory from the FEPROM on the motherboard. A checksum test is executed for the console image. If the checksum test fails, an error beep code (1-1-4) is generated and the power-up tests are terminated.

   If the checksum test passes, control is passed to the console code, and the console firmware-based diagnostics are run.

### 2.9.2 Console Firmware-Based Diagnostics

Console firmware-based tests are executed once control is passed to the console code in memory. They check the system in the following order:

1. Perform a complete check of system memory.

   Steps 2–5 may be completed in parallel.

2. Start the I/O drivers for mass storage devices and tapes. At this time a complete functional check of the machine is made. After the I/O drivers are started, the console program continuously polls the bus for devices (approximately every 20 or 30 seconds).

3. Check that EISA configuration information is present in NVRAM for each EISA module detected and that no information is present for modules that have been removed.

4. Run exercisers on the drives currently seen by the system.

**Note**

This step does not ensure that all disks in the system will be tested or that any device drivers will be completely tested. Spin-up time varies for different drives, so not all disks may be on line at this point in the power-up sequence. To ensure complete testing of disk devices, use the `test` command (Section 3.3.1).

5. Enter console mode or boot the operating system. This action is determined by the `auto_action` environment variable.

   If the `os_type` environment variable is set to NT, the ARC console is loaded into memory, and control is passed to the ARC console.

# 3
# Running System Diagnostics

This chapter provides information on how to run system diagnostics.

- Section 3.1 describes how to run ROM-based diagnostics, including error reporting utilities and loopback tests.
- Section 3.4 describes acceptance testing and initialization procedures.
- Section 3.5 describes the DEC VET operating system exerciser.

## 3.1 Running ROM-Based Diagnostics

ROM-based diagnostics (RBDs), which are part of the console firmware that is loaded from the FEPROM on the system motherboard, offer many powerful diagnostic utilities, including the ability to examine error logs from the console environment and run system- or device-specific exercisers.

AlphaServer 1000 RBDs rely on exerciser modules, rather than functional tests, to isolate errors. The exercisers are designed to run concurrently, providing a maximum bus interaction between the console drivers and the target devices.

The multitasking ability of the console firmware allows you to run diagnostics in the background (using the background operator ''&'' at the end of the command). You run RBDs by using console commands.

**Note**

ROM-based diagnostics, including the `test` command, are run from the SRM console (firmware used by OpenVMS and DEC OSF/1 systems). If you are running a Windows NT system, refer to Section 5.1.2 for the steps used to switch between consoles.

RBDs report errors to the console terminal and/or the console event log.

## 3.2 Command Summary

Table 3–1 provides a summary of the diagnostic and related commands.

**Table 3–1 Summary of Diagnostic and Related Commands**

| Command | Function | Reference |
|---|---|---|
| **Acceptance Testing** | | |
| test | Quickly tests the core system. The `test` command is the primary diagnostic for acceptance testing and console environment diagnosis. | Section 3.3.1 |
| **Error Reporting** | | |
| cat el | Displays the console event log. | Section 3.3.2 |
| more el | Displays the console event log one screen at a time. | Section 3.3.2 |
| **Extended Testing/Troubleshooting** | | |
| memory | Runs memory exercises each time the command is entered. These exercises run concurrently in the background. | Section 3.3.3 |
| net -ic | Initializes the MOP counters for the specified Ethernet port. | Section 3.3.7 |
| net -s | Displays the MOP counters for the specified Ethernet port. | Section 3.3.6 |
| netew | Runs external mop loopback tests for specified EISA- or PCI-based ew* (DECchip 21040, TULIP) Ethernet ports. | Section 3.3.4 |
| network | Runs external mop loopback tests for specified EISA- or PCI-based er* (DEC 4220, LANCE) Ethernet ports. | Section 3.3.5 |

(continued on next page)

**Table 3–1 (Cont.) Summary of Diagnostic and Related Commands**

| Command | Function | Reference |
|---|---|---|
| **Loopback Testing** | | |
| test lb | Conducts loopback tests for COM2 and the parallel port in addition to quick core system tests. | Section 3.3.1 |
| netew | Runs external mop loopback tests for specified EISA- or PCI-based ew* (DECchip 21040, TULIP) Ethernet ports. | Section 3.3.4 |
| network | Runs external mop loopback tests for specified EISA- or PCI-based er* (DEC 4220, LANCE) Ethernet ports. | Section 3.3.5 |
| **Diagnostic-Related Commands** | | |
| kill | Terminates a specified process. | Section 3.3.8 |
| kill_diags | Terminates all currently executing diagnostics. | Section 3.3.8 |
| show_status | Reports the status of currently executing test /exercisers. | Section 3.3.9 |

## 3.3 Command Reference

This section provides detailed information on the diagnostic commands and related commands.

### 3.3.1 test

The `test` command runs firmware diagnostics for the entire core system. The tests are run concurrently in the background. Fatal errors are reported to the console terminal.

The `cat el` command should be used in conjunction with the `test` command to examine test/error information reported to the console event log.

Because the tests are run concurrently and indefinitely (until you stop them with the `kill_diags` command), they are useful in flushing out intermittent hardware problems.

**Note**

By default, no write tests are performed on disk and tape drives. Media must be installed to test the floppy drive and tape drives. A loopback connector is required for the COM2 (9-pin loopback connector, 12-27351-01) port.

To terminate the tests, use the `kill` command to terminate an individual diagnostic or the `kill_diags` command to terminate all diagnostics. Use the `show_status` display to determine the process ID when terminating an individual diagnostic test.

**Note**

A serial loopback connector (12-27351-01) must be installed on the COM2 serial port for the `kill_diags` command to successfully terminate system tests.

The `test` script tests devices in the following order:

1. Console loopback tests if lb argument is specified: COM2 serial port and parallel port.
2. Network external loopback tests for E*A0. This test requires that the Ethernet port be terminated or connected to a live network; otherwise, the test will fail.
3. Memory tests (one pass).
4. Read-only tests: DK* disks, DR* disks, DU* disks, MK* tapes, DV* floppy.

5. VGA console tests. These tests are run only if the console environment variable is set to ‘‘serial.’’ The VGA console test displays rows of the letter ‘‘H’’.

*Synopsis:*

test [lb]

*Argument:*

| | |
|---|---|
| [lb] | The loopback option includes console loopback tests for the COM2 serial port and the parallel port during the test sequence. |

*Examples:*

The system is tested and the tests complete successfully.

**Note**

Examine the console event log after running tests.

```
>>> test
Requires diskette and loopback connectors on COM2 and parallel port
type kill_diags to halt testing
type show_status to display testing progress
type cat el to redisplay recent errors
Testing COM2 port
Setting up network test, this will take about 20 seconds
Testing the network
     48 Meg of System Memory
     Bank 0 = 16 Mbytes(4 MB Per Simm) Starting at 0x00000000
     Bank 1 = 16 Mbytes(4 MB Per Simm) Starting at 0x01000000
     Bank 2 = 16 Mbytes(4 MB Per Simm) Starting at 0x02000000
     Bank 3 = No Memory Detected

Testing the memory
Testing parallel port
Testing the SCSI Disks
Non-destructive Test of the Floppy starteddka400.4.0.6.0 has no media
present or is disabled via the RUN/STOP switch
file open failed for dka400.4.0.6.0
Testing the VGA(Alphanumeric Mode only)
Printer offline
file open failed for para

>>> show_status
```

```
 ID       Program      Device       Pass  Hard/Soft Bytes Written  Bytes Read
-------- ------------ ------------ ------ --------- ------------- -------------
00000001         idle system            0    0    0             0             0
0000002d     exer_kid tta1              0    0    0             1             0
0000003d      nettest era0.0.0.2.1     43    0    0          1376          1376
00000045      memtest memory            7    0    0     424673280     424673280
00000052     exer_kid dka100.1.0.6      0    0    0             0       2688512
00000053     exer_kid dka200.2.0.6      0    0    0             0       922624
>>> kill_diags
>>>
```

The system is tested and the system reports a fatal error message. No network server responded to a loopback message. Ethernet connectivity on this system should be checked.

```
>>> test
Requires diskette and loopback connectors on COM2 and parallel port
type kill_diags to halt testing
type show_status to display testing progress
type cat el to redisplay recent errors
Testing COM2 port
Setting up network test, this will take about 20 seconds
Testing the network

*** Error (era0), Mop loop message timed out from: 08-00-2b-3b-42-fd

*** List index: 7 received count: 0 expected count 2

>>>
```

### 3.3.2 cat el and more el

The `cat el` and `more el` commands display the current contents of the console event log. Status and error messages (if problems occur) are logged to the console event log at power-up, during normal system operation, and while running system tests.

Standard error messages are indicated by asterisks (***).

When `cat el` is used, the contents of the console event log scroll by. You can use the Ctrl/S combination to stop the screen from scrolling, Ctrl/Q to resume scrolling.

The `more el` command allows you to view the console event log one screen at a time.

*Synopsis:*

cat el

or

more el

*Examples:*

The following examples show abbreviated console event logs that contain standard error messages:

❶ The first error message indicates the keyboard is not plugged in or is not working.

```
>>> cat el
*** keyboard not plugged in...  ❶
ff.fe.fd.fc.fb.fa.f9.f8.f7.f6.f5.
ef.df.ee.f4.ed.ec.eb.ea.e9.e8.e7.e6.port pka0.7.0.6.0 initialized,
scripts are at 4f7faa0
resetting the SCSI bus on pka0.7.0.6.0
port pkb0.7.0.12.0 initialized, scripts are at 4f82be0
resetting the SCSI bus on pkb0.7.0.12.0
e5.e4.e3.e2.e1.e0.
V1.1-1, built on Nov  4 1994 at 16:44:07
device dka400.4.0.6.0 (RRD43) found on pka0.4.0.6.0
>>>
```

### 3.3.3 memory

The `memory` command tests memory by running a memory exerciser each time the command is entered. The exercisers are run in the background and nothing is displayed unless an error occurs.

The number of exercisers, as well as the length of time for testing, depends on the context of the testing. Generally, running three to five exercisers for 15 minutes to 1 hour is sufficient for troubleshooting most memory problems.

To terminate the memory tests, use the `kill` command to terminate an individual diagnostic or the `kill_diags` command to terminate all diagnostics. Use the `show_status` display to determine the process ID when terminating an individual diagnostic test.

*Synopsis:*

memory

*Examples:*

Example with no errors.

```
>>> memory
>>> memory
>>> memory
>>> show_status

 ID       Program      Device       Pass  Hard/Soft Bytes Written  Bytes Read
-------- ------------ ------------ ------ --------- ------------- -------------
00000001         idle system            0    0    0             0             0
0000006b      memtest memory            1    0    0      53477376      53477376
00000071      memtest memory            1    0    0      31457280      31457280
00000077      memtest memory            1    0    0      24117248      24117248
>>> kill_diags
>>>
```

Example with a memory compare error indicating bad SIMMs.

```
>>> memory
>>> memory
>>> memory

*** Hard Error - Error #44 - Memory compare error

Diagnostic Name        ID             Device  Pass  Test  Hard/Soft   1-JAN-2066
memtest          000000c8               brd0     1     1     1    0     12:00:01
Expected value:  00000004
Received value:  80000001
Failing addr:    800001c

*** End of Error ***

>>> kill_diags
>>>
```

### 3.3.4 netew

The `netew` command is used to run MOP loopback tests for any EISA- or PCI-based ew* (DECchip 21040, TULIP) Ethernet ports. The command can also be used to test a port on a ‘‘live’’ network.

The loopback tests are set to run continuously (-p pass_count set to 0). Use the `kill` command (or Ctrl/C) to terminate an individual diagnostic or the `kill_diags` command to terminate all diagnostics. Use the `show_status` display to determine the process ID when terminating an individual diagnostic test.

**Note**

While some results of network tests are reported directly to the console, you should examine the console event log (using the `cat el` or `more el` commands) for complete test results.

*Synopsis:*

netew

When the `netew` command is entered, the following script is executed:

```
net -sa ew*0>ndbr/lp_nodes_ew*0
set ew*0_loop_count 2 2>nl
set ew*0_loop_inc 1 2>nl
set ew*0_loop_patt ffffffff 2>nl
set ew*0_loop_size 10 2>nl
set ew*0_lp_msg_node 1 2>nl
net -cm ex ew*0
echo "Testing the network"
nettest ew*0 -sv 3 -mode nc -p 0 -w 1 &
```

The script builds a list of nodes for which to send MOP loopback packets, sets certain test environment variables, and tests the Ethernet port by using the following variation of the nettest exerciser:

nettest ew*0 -sv 3 -mode nc -p 0 -w 1 &

*Testing an Ethernet Port:*

```
>>> netew
>>> show_status
 ID       Program      Device       Pass  Hard/Soft Bytes Written  Bytes Read
-------- ------------ ------------ ------ --------- ------------- -------------
00000001         idle system            0    0    0             0             0
000000d5      nettest ewa0.0.0.0.0     13    0    0        308672        308672
>>> kill_diags
>>>
```

### 3.3.5 network

The network command is used to run MOP loopback tests for any EISA- or PCI-based er* (DEC 4220, LANCE) Ethernet ports. The command can also be used to test a port on a ‘‘live’’ network.

The loopback tests are set to run continuously (-p pass_count set to 0). Use the kill command (or Ctrl/C) to terminate an individual diagnostic or the kill_diags command to terminate all diagnostics. Use the show_status display to determine the process ID when terminating an individual diagnostic test.

**Note**

While some results of network tests are reported directly to the console, you should examine the console event log (using the cat el or more el commands) for complete test results.

*Synopsis:*

network

When the network command is entered, the following script is executed:

```
echo "setting up the network test, this will take about 20 seconds"
net -stop er*0
net -sa er*0>ndbr/lp_nodes_er*0
net ic er*0
set er*0_loop_count 2 2>nl
set er*0_loop_inc 1 2>nl
set er*0_loop_patt ffffffff 2>nl
set er*0_loop_size 10 2>nl
set er*0_lp_msg_node 1 2>nl
set er*0_mode 44 2>nl
net -start er*0
echo "Testing the network"
nettest er*0 -sv 3 -mode nc -p 0 -w 1 &
```

The script builds a list of nodes for which to send MOP loopback packets, sets certain test environment variables, and tests the Ethernet port by using the following variation of the nettest exerciser:

nettest er*0 -sv 3 -mode nc -p 0 -w 1 &

*Testing an Ethernet Port:*

```
>>> network
>>> show_status
 ID       Program      Device       Pass  Hard/Soft Bytes Written  Bytes Read
-------- ------------ ------------ ------ --------- ------------- -------------
00000001         idle system            0    0    0             0             0
000000d5      nettest era0.0.0.0.0     13    0    0        308672        308672
>>> kill_diags
>>>
```

### 3.3.6 net -s

The `net -s` command displays the MOP counters for the specified Ethernet port.

*Synopsis:*

net -s ewa0

*Example:*

```
>>> net -s ewa0

Status counts:
ti: 72 tps: 0 tu: 47 tjt: 0 unf: 0 ri: 70 ru: 0
rps: 0 rwt: 0 at: 0 fd: 0 lnf: 0 se: 0 tbf: 0
tto: 1 lkf: 1 ato: 1 nc: 71 oc: 0

MOP BLOCK:
 Network list size: 0

MOP COUNTERS:
Time since zeroed (Secs): 42

TX:
 Bytes: 0 Frames: 0
 Deferred: 1 One collision: 0 Multi collisions: 0
TX Failures:
 Excessive collisions: 0 Carrier check: 0 Short circuit: 71
 Open circuit: 0 Long frame: 0 Remote defer: 0
 Collision detect: 71

RX:
 Bytes: 49972 Frames: 70
 Multicast bytes: 0 Multicast frames: 0
RX Failures:
 Block check: 0 Framing error: 0 Long frame: 0
 Unknown destination: 0 Data overrun: 0 No system buffer: 0
 No user buffers: 0
>>>
```

### 3.3.7 net -ic

The `net -ic` command initializes the MOP counters for the specified Ethernet port.

*Synopsis:*

net -ic ewa0

*Example:*

```
>>> net -ic ewa0
>>> net -s ewa0
Status counts:
ti: 72 tps: 0 tu: 47 tjt: 0 unf: 0 ri: 70 ru: 0
rps: 0 rwt: 0 at: 0 fd: 0 lnf: 0 se: 0 tbf: 0
tto: 1 lkf: 1 ato: 1 nc: 71 oc: 0

MOP BLOCK:
 Network list size: 0

MOP COUNTERS:
Time since zeroed (Secs): 3

TX:
 Bytes: 0 Frames: 0
 Deferred: 0 One collision: 0 Multi collisions: 0
TX Failures:
 Excessive collisions: 0 Carrier check: 0 Short circuit: 0
 Open circuit: 0 Long frame: 0 Remote defer: 0
 Collision detect: 0

RX:
 Bytes: 0 Frames: 0
 Multicast bytes: 0 Multicast frames: 0
RX Failures:
 Block check: 0 Framing error: 0 Long frame: 0
 Unknown destination: 0 Data overrun: 0 No system buffer: 0
 No user buffers: 0
>>>
```

### 3.3.8 kill and kill_diags

The `kill` and `kill_diags` commands terminate diagnostics that are currently executing .

**Note**

A serial loopback connector (12-27351-01) must be installed on the COM2 serial port for the `kill_diags` command to successfully terminate system tests.

- The `kill` command terminates a specified process.
- The `kill_diags` command terminates all diagnostics.

*Synopsis:*

kill_diags

kill [PID . . . ]

*Argument:*

[PID . . . ] The process ID of the diagnostic to terminate. Use the `show_status` command to determine the process ID.

### 3.3.9 show_status

The `show_status` command reports one line of information per executing diagnostic. The information includes ID, diagnostic program, device under test, error counts, passes completed, bytes written, and bytes read.

Many of the diagnostics run in the background and provide information only if an error occurs. Use the `show_status` command to display the progress of diagnostics.

The following command string is useful for periodically displaying diagnostic status information for diagnostics running in the background:

```
>>>  while true;show_status;sleep n;done
```

Where *n* is the number of seconds between `show_status` displays.

*Synopsis:*

show_status

*Example:*

```
>>> show_status

    ❶        ❷          ❸          ❹    ❺         ❻              ❼
>>>show_status
 ID       Program      Device       Pass  Hard/Soft Bytes Written  Bytes Read
-------- ------------ ------------ ------ --------- ------------- -------------
00000001         idle system            0    0    0             0             0
0000002d     exer_kid tta1              0    0    0             1             0
0000003d      nettest era0.0.0.2.1     43    0    0          1376          1376
00000045      memtest memory            7    0    0     424673280     424673280
00000052     exer_kid dka100.1.0.6      0    0    0             0       2688512
>>>
```

❶ Process ID

❷ Program module name

❸ Device under test

❹ Diagnostic pass count

❺ Error count (hard and soft): Soft errors are not usually fatal; hard errors halt the system or prevent completion of the diagnostics.

❻ Bytes successfully written by diagnostic

❼ Bytes successfully read by diagnostic

## 3.4 Acceptance Testing and Initialization

Perform the acceptance testing procedure listed below after installing a system or whenever adding or replacing the following:

Memory modules
Motherboard
CPU daughter board
Storage devices
EISA or PCI options

1. Run the RBD acceptance tests using the `test` command.
2. If you have added, moved, or removed an EISA or ISA option, run the EISA Configuration Utility (ECU).
3. Bring up the operating system.
4. Run DEC VET to test that the operating system is correctly installed. Refer to Section 3.5 for information on DEC VET.

## 3.5 DEC VET

Digital's DEC Verifier and Exerciser Tool (DEC VET) software is a multipurpose system maintenance tool that performs exerciser-oriented maintenance testing. DEC VET runs on OpenVMS AXP, DEC OSF/1, and Windows NT operating systems. DEC VET consists of a manager and exercisers. The DEC VET manager controls the exercisers. The exercisers test system hardware and the operating system.

DEC VET supports various exerciser configurations, ranging from a single device exerciser to full system loading, that is, simultaneous exercising of multiple devices.

Refer to the *DEC Verifier and Exerciser Tool User's Guide* (AA–PTTMA–TE) for instructions on running DEC VET.

# 4
# Error Log Analysis

This chapter provides information on how to interpret error logs reported by the operating system.

- Section 4.1 describes machine check/interrupts and how these errors are detected and reported.
- Section 4.2 describes the entry format used by the error formatters.
- Section 4.3 describes how to generate a formatted error log using the DECevent Translation and Reporting Utility available with OpenVMS and Digital UNIX.

## 4.1 Fault Detection and Reporting

Table 4–1 provides a summary of the fault detection and correction components of AlphaServer 1000 systems.

Generally, PALcode handles exceptions as follows:

- The PALcode determines the cause of the exception.
- If possible, it corrects the problem and passes control to the operating system for reporting before returning the system to normal operation.
- If error/event logging is required, control is passed through the system control block (SCB) to the appropriate exception handler.

**Table 4–1 AlphaServer 1000 Fault Detection and Correction**

| Component | Fault Detection/Correction Capability |
|---|---|
| **KN22A Processor Module** | |
| DECchip 21064 and 21064A microprocessors | Contains error detection and correction (EDC) logic for data cycles. There are check bits associated with all data entering and exiting the 21064(A) microprocessor. A single-bit error on any of the four longwords being read can be corrected (per cycle). A double-bit error on any of the four longwords being read can be detected (per cycle). |
| Backup cache (B-cache) | EDC check bits on the data store, and parity on the tag address store and tag control store. |
| **Memory Subsystem** | |
| Memory SIMMs | EDC logic protects data by detecting and correcting data cycle errors. A single-bit on any of the four longwords can be corrected (per cycle). A double-bit error on any of the four longwords being read can be detected (per cycle). |
| **System Motherboard** | |
| SCSI Controller | SCSI data parity is generated. |
| EISA-to-PCI bridge chip | PCI data parity is generated. |

### 4.1.1 Machine Check/Interrupts

The exceptions that result from hardware system errors are called machine check/interrupts. They occur when a system error is detected during the processing of a data request. There are four types of machine check/interrupts related to system events:

1. Processor machine check (SCB 670)
2. System machine check (SCB 660)
3. Processor-corrected machine check (SCB 630)
4. System-corrected machine check (SCB 620)

During the error handling process, errors are first handled by the appropriate PALcode error routine and then by the associated operating system error handler. The causes of each of the machine check/interrupts are as follows. The system control block (SCB) vector through which PALcode transfers control to the operating system is shown in parentheses.

### Processor Machine Check (SCB: 670)

Processor machine check errors are fatal system errors that result in a system crash. The error handling code for these errors are common across all platforms using the DECchip 21064 and 21064A microprocessors.

- The DECchip 21064 or 21064A microprocessor detected one or more of the following uncorrectable data errors:
  - Uncorrectable B-cache data error
  - Uncorrectable memory data error
- A B-cache tag or tag control parity error occurred
- Hard error was asserted in response to:
  - Double-bit Istream ECC error
  - Double-bit Dstream ECC error
  - System transaction terminated with CACK_HERR
  - I-cache parity errors
  - D-cache parity errors

### System Machine Check (SCB: 660)

A system machine check is a system-detected error, external to the DECchip 21064 microprocessor and possibly not related to the activities of the CPU. These errors are specific to AlphaServer 1000 systems.

Fatal errors:

- System overtemperature failure
- System complete power supply failure
- System fan failure
- I/O read/write retry timeout
- DMA data parity error
- I/O data parity error
- Slave abort PCI transaction
- DEVSEL not asserted
- Uncorrectable read error
- Invalid page table lookup (scatter gather)
- Memory cycle error

- B-cache tag address parity error
- B-cache tag control parity error
- Non-existent memory error
- ESC NMI: IOCHK

#### Processor-Corrected Machine Check (SCB: 630)

Processor-corrected machine checks are caused by B-cache errors that are detected and corrected by the DECchip 21064 or 21064A microprocessor. These are nonfatal errors that result in an error log entry. The error handling code for these errors are common across all platforms using the DECchip 21064 and 21064A microprocessors.

- Single-bit Istream ECC error
- Single-bit Dstream ECC error
- System transaction terminated with CACK_SERR

#### System Machine Check (SCB: 620)

These errors (non-fatal) are AlphaServer 1000-specific correctable errors. These errors result in the generation of the correctable machine check logout frame:

- Correctable read errors
- Single power supply failure when operating with redundant power supplies.
- System overtemperature warning

## 4.2 Error Logging and Event Log Entry Format

The Digital UNIX and OpenVMS error handlers can generate several entry types. All error entries, with the exception of correctable memory errors, are logged immediately. Entries can be of variable length based on the number of registers within the entry.

Each entry consists of an operating system header, several device frames, and an end frame. Most entries have a PAL-generated logout frame, and may contain frames for CPU, memory, and I/O.

## 4.3 Event Record Translation

Systems running Digital UNIX and OpenVMS operating systems use the DECevent management utility to translate events into ASCII reports derived from system event entries (bit-to-text translations).

The DECevent utility has the following features relating to the translation of events:

- Translating event log entries into readable reports
- Selecting input and output sources
- Filtering input events
- Selecting alternate reports
- Translating events as they occur
- Maintaining and customizing the user environment with the interactive shell commands

**Note**

Microsoft Windows NT does not currently provide bit-to-text translation of system errors.

- Section 4.3.1 summarizes the command used to translate the error log information for the OpenVMS operating system using DECevent.
- Section 4.3.2 summarizes the command used to translate the error log information for the Digital UNIX operating system using DECevent.

### 4.3.1 OpenVMS Translation Using DECevent

The kernel error log entries are translated from binary to ASCII using the DIAGNOSE command. To invoke the DECevent utility, enter the DCL command DIAGNOSE.

*Format:*

DIAGNOSE/TRANSLATE [*qualifier*] [, . . . ] [*infile*[, . . . ]]

*Example:*

```
$ DIAGNOSE/TRANSLATE/SINCE=14-JUN-1995
```

For more information on generating error log reports using DECevent, refer to *DECevent Translation and Reporting Utility for OpenVMS User and Reference Guide*.

### 4.3.2 Digital UNIX Translation Using DECevent

The kernel error log entries are translated from binary to ASCII using the dia command. To invoke the DECevent utility, enter dia command.

*Format:*

dia [-a -f *infile*[ . . . ]]

*Example:*

```
% dia -t s:14-jun-1995:10:00
```

For more information on generating error log reports using DECevent, refer to *DECevent Translation and Reporting Utility for Digital UNIX User and Reference Guide*.

# 5

# System Configuration and Setup

This chapter provides configuration and setup information for AlphaServer 1000 systems and system options.

- Section 5.1 describes how to examine the system configuration using the console firmware.
  - Section 5.1.1 describes the function of the two firmware interfaces used with AlphaServer 1000 systems.
  - Section 5.1.2 describes how to switch between firmware interfaces.
  - Sections 5.1.3 and 5.1.4 describe the commands used to examine system configuration for each firmware interface.
- Section 5.2 describes the system bus configuration.
- Section 5.3 describes the motherboard.
- Section 5.4 describes the EISA bus.
- Section 5.5 describes how ISA options are compatible on the EISA bus.
- Section 5.6 describes the EISA configuration utility (ECU).
- Section 5.7 describes the PCI bus.
- Section 5.8 describes SCSI buses and configurations.
- Section 5.9 describes power supply configurations.
- Section 5.10 describes the console port configurations.

## 5.1 Verifying System Configuration

Figure 5–1 illustrates the system architecture for AlphaServer 1000 systems.

**Figure 5–1 System Architecture: AlphaServer 1000**

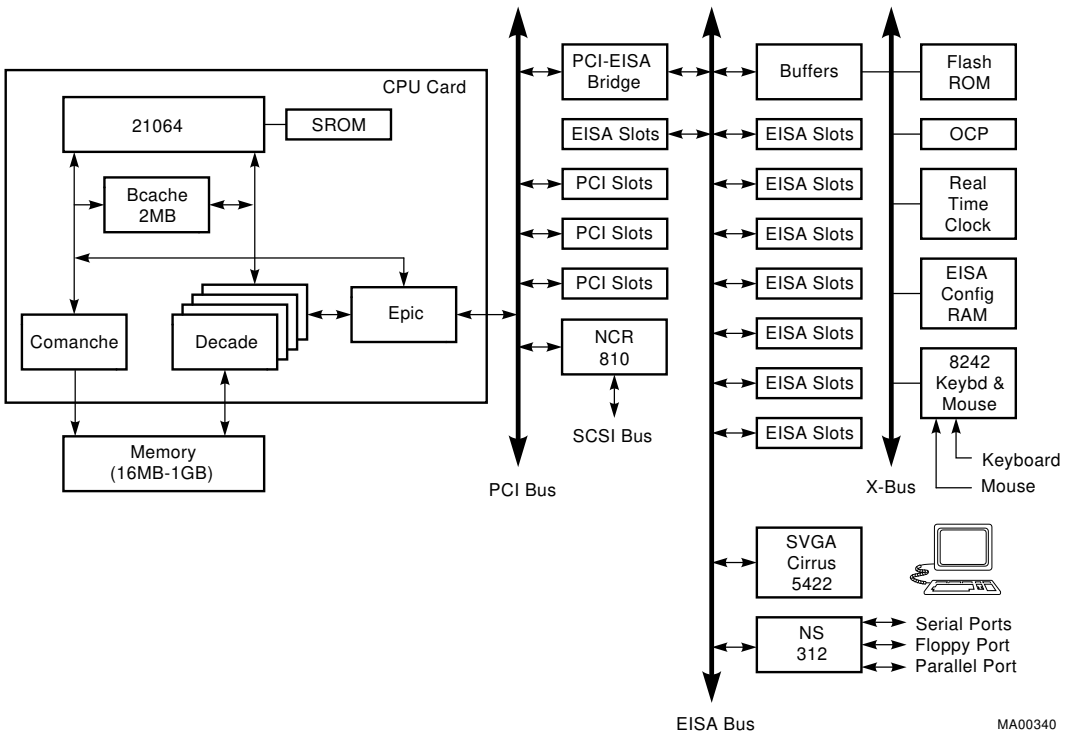


### 5.1.1 System Firmware

The system firmware currently provides support for the following operating systems:

- DEC OSF/1 and OpenVMS Alpha are supported under the SRM command line interface, which can be serial or graphical. The SRM firmware is in compliance with the *Alpha System Reference Manual* (SRM).
- Windows NT is supported under the ARC menu interface, which is graphical. The ARC firmware is in compliance with the *Advanced RISC Computing Standard Specification* (ARC).

The console firmware provides the data structures and callbacks available to booted programs defined in both the SRM and ARC standards.

### SRM Command Line Interface

Systems running DEC OSF/1 or OpenVMS access the SRM firmware through a command line interface (CLI). The CLI is a UNIX style shell that provides a set of commands and operators, as well as a scripting facility. The CLI allows you to configure and test the system, examine and alter system state, and boot the operating system.

The SRM console prompt is >>>.

Several system management tasks can be performed only from the SRM console command line interface:

- All console test and reporting commands are run from the SRM console.
- Certain environment variables are changed using the SRM `set` command. For example:

  er*0_protocols
  ew*0_mode
  ew*0_protocols
  ocp_text
  pk*0_fast
  pk*0_host_id

To run the ECU, you must enter the `ecu` command. This command will boot the ARC firmware and the ECU software.

### ARC Menu Interface

Systems running Windows NT access the ARC console firmware through menus that are used to configure and boot the system, run the EISA Configuration Utility (ECU), run the RAID Configuration Utility (RCU), or set environment variables.

- You must run the EISA Configuration Utility (ECU) whenever you add, remove, or move an EISA or ISA option in your AlphaServer system. The ECU is run from diskette. Two diskettes are supplied with your system shipment, one for DEC OSF/1 and OpenVMS and one for Windows NT. For more information about running the ECU, refer to Section 5.6.
- If you purchased a StorageWorks RAID Array 200 Subsystem for your server, you must run the RAID Configuration Utility (RCU) to set up the disk drives and logical units. Refer to *StorageWorks RAID Array 200 Subsystem Family Installation and Configuration Guide*, included in your RAID kit.

## 5.1.2 Switching Between Interfaces

For a few procedures it is necessary to switch from one console interface to the other.

- The `test` command is run from the SRM interface.
- The EISA Configuration Utility (ECU) and the RAID Configuration Utility (RCU) are run from the ARC interface.

### Switching from SRM to ARC

Two SRM console commands are used to switch to the ARC console:

- The `arc` command loads the ARC firmware and switches to the ARC menu interface.
- The `ecu` command loads the ARC firmware and then boots the ECU diskette.

### Switching from ARC to SRM

Switch from the ARC console to the SRM console as follows:

1. From the Boot menu, select the Supplementary menu.
2. From the Supplementary menu, select ''Set up the system.''
3. From the Setup menu, select ''Switch to OpenVMS or OSF console.''
4. Select your operating system, then press enter on ''Setup menu.''
5. When the ''Power-cycle the system to implement the change'' message is displayed, press the Reset button. Once the console firmware is loaded and the system is initialized, the SRM console prompt, >>>, is displayed.

## 5.1.3 Verifying Configuration: ARC Menu Options for Windows NT

The following ARC menu options are used for verifying system configuration on Windows NT systems:

- `Display hardware configuration` (Section 5.1.3.1)—Lists the ARC device names for devices installed in the system.
- `Set default environment variables` (Section 5.1.3.2)—Allows you to select values for Windows NT firmware environment variables.

#### 5.1.3.1 Display Hardware Configuration

The hardware configuration display provides the following information:

- The first screen displays the boot devices.
- The second screen displays processor information, the amount of memory installed, and the type of video card installed.
- The third and fourth screens display information about the adapters installed in the system's EISA and PCI slots.

Table 5–1 lists the steps to view the hardware configuration display.

**Table 5–1 Listing the ARC Firmware Device Names**

| Step | Action | Result |
|---|---|---|
| 1 | If necessary, access the Supplementary menu. | The system displays the Supplementary menu. |
| 2 | Choose Display hardware configuration and press Enter. | The system displays the hardware configuration screens. |

Table 5–2 explains the device names listed on the first screen of the hardware configuration display.

**Note**

The available boot devices display does not list tape drives or network devices.

**Table 5–2 ARC Firmware Device Names**

| Name | Description |
|---|---|
| multi(0)key(0)keyboard(0)<br>multi(0)serial(0)<br>multi(0)serial(1) | The multi( ) devices are located on the system module. These devices include the keyboard port and the serial line ports. |
| eisa(0)video(0)monitor(0)<br>eisa(0)disk(0)fdisk(0) | The eisa( ) devices are provided by devices on the EISA bus. These devices include the monitor and the diskette drive. |

(continued on next page)

**Table 5–2 (Cont.) ARC Firmware Device Names**

| Name | Description |
|---|---|
| scsi(0)disk(0)rdisk(0)<br>scsi(0)cdrom(5)fdisk(0) | The scsi( ) devices are SCSI disk or CD–ROM devices. These examples represent installed SCSI devices. The disk drives are set to SCSI ID 0, and the CD–ROM drive is set to SCSI ID 5. The devices have logical unit numbers of 0. |

**Example 5–1 Sample Hardware Configuration Display**

```
                                        Wednesday, 8-31-1994  10:51:32 AM

Devices detected and supported by the firmware:

     ❶                          ❷              ❸
   eisa(0)video(0)monitor(0)
   multi(0)key(0)keyboard(0)
   eisa(0)disk(0)fdisk(0)       (Removable)
   multi(0)serial(0)
   multi(0)serial(1)
   scsi(0)disk(0)rdisk(0)       (1 Partition)   DEC  RZ26L  (C)DEC440C
   scsi(0)cdrom(5)fdisk(0)      (Removable)     DEC  RRD43  (C)DEC 0064

Press any key to continue...
                                        Wednesday, 8-31-1994  10:51:32 AM

Alpha AXP Processor and System Information:

  Processor ID          21064
  Processor Revision    3
  System Revision       0
  Processor Speed       200 Mhz
  Physical Memory       48 MB
  Backup Cache Size     2 MB

Video Option detected:

  BIOS controlled video card

 Press any key to continue...
                                        Wednesday, 8-31-1994  10:51:32 AM
EISA slot information:
```

(continued on next page)

**Example 5–1 (Cont.) Sample Hardware Configuration Display**

```
  Slot    Device          Identifier
    0      Other            DEC2A01
    1       Disk            ADP0001
    2    Network            DEC4220
    5    Network            DEC3002
    6    Network            DEC4250
    7    Display            CPQ3011
    0       Disk             FLOPPY

 Press any key to continue...
                                          Wednesday, 8-31-1994  10:51:32 AM

PCI slot information:

  Bus  Virtual Slot  Function  Vendor  Device  Revision  Device type
   0         6          0       1000       1       1     SCSI
   0         7          0       8086     482       3     EISA bridge
   0         7          0       1011       2      23     Ethernet

 Press any key to continue...

Extended Firmware Information:

    Version: 4.1-19950117.1606
    NVRAM Environment Usage: 32%
       (330 of 1024 bytes)

 Press any key to continue...
```

❶ Device—Indicates the type of device, for example, EISA or SCSI.

❷ Configuration—Indicates how the device is configured, the number of partitions, and whether the device is a removable device.

❸ Identifier string—Indicates the device manufacturer, model number, and other identification.

### 5.1.3.2 Set Default Variables

The Set default environment variables option of the Setup menu sets and displays the default Windows NT firmware environment variables.

**Caution**

Do not edit or delete the default firmware Windows NT environment variables. This can result in corrupted data or make the system inoperable. To modify the values of the environment variables, use the menu options on the ‘‘Set up the system’’ menu.

Table 5–3 lists and explains the default ARC firmware environment variables.

**Table 5–3 ARC Firmware Environment Variables**

| Variable | Description |
|---|---|
| A: | The default floppy drive. The default value is eisa( )disk( )fdisk( ). |
| AUTOLOAD | The default startup action, either YES (boot) or NO or undefined (remain in Windows NT firmware). |
| CONSOLEIN | The console input device. The default value is multi( )key( )keyboard( )console( ). |
| CONSOLEOUT | The console output device. The default value is eisa( )video( )monitor( )console( ). |
| COUNTDOWN | The default time limit in seconds before the system boots automatically when AUTOLOAD is set to yes. The default value is 10. |
| DISABLEPCIPARITY-CHECKING | Disables parity checking on the PCI bus in order to prevent machine check errors that can occur if the PCI device has not properly set the parity on the bus. The default value is FALSE—PCI parity checking is enabled. |
| FLOPPY | The capacity of the default diskette drive, either 1 (1.2 MB), 2 (1.44 MB), or 3 (2.88 MB). |
| FLOPPY2 | The capacity of an optional second diskette drive, either N (not installed), 1, 2, or 3. |
| FWSEARCHPATH | The search path used by the Windows NT firmware and other programs to locate particular files. The default value is the same as the SYSTEMPARTITION environment variable value. |
| TIMEZONE | The time zone in which the system is located. This variable accepts ISO/IEC9945-1 (POSIX) standard values. |

**Note**

The operating system or other programs, for example, the ECU, may create either temporary or permanent environment variables for their own use. Do not edit or delete these environment variables.

### 5.1.4 Verifying Configuration: SRM Console Commands for DEC OSF/1 and OpenVMS

The following SRM console commands are used to verify system configuration on DEC OSF/1 and OpenVMS systems:

- `show config` (Section 5.1.4.1)—Displays the buses on the system and the devices found on those buses.
- `show device` (Section 5.1.4.2)—Displays the devices and controllers in the system.
- `show memory` (Section 5.1.4.3)—Displays main memory configuration.
- `set` and `show` (Section 5.1.4.4)—Set and display environment variable settings.

#### 5.1.4.1 show config

The `show config` command displays all devices found on the system bus, PCI bus, and EISA bus. You can use the information in the display to identify target devices for commands such as `boot` and `test`, as well as to verify that the system sees all the devices that are installed.

The configuration display includes the following:

- Firmware:

  The version numbers for the firmware code, PALcode, SROM chip, and CPU are displayed.

- Memory:

  The memory size and configuration for each bank of memory is displayed.

- PCI Bus:
  - Slot 6 = SCSI controller on motherboard, along with storage drives on the bus.
  - Slot 7 = EISA to PCI bridge chip
  - Slots 11–13 = Correspond to PCI card cage slots: PCI0, PCI1, and PCI2. For storage controllers, the devices off the controller are also displayed.

- EISA Bus:

  Slot numbers correspond to EISA card cage slots (1–8). For storage controllers, the devices off the controller are also displayed.

For more information on device names, refer to Figure 5–2.

*Synopsis:*

show config

*Example:*

```
>>> show config
Firmware
SRM Console:    V1.1-1
ARC Console:    3.5-14
PALcode:        VMS PALcode X5.55, OSF PALcode X1.35-53
Serial Rom:      1.1

Processor
DECchip (tm) 21064-2

MEMORY
     48 Meg of System Memory
     Bank 0 = 16 Mbytes(4 MB Per Simm) Starting at 0x00000000
     Bank 1 = 16 Mbytes(4 MB Per Simm) Starting at 0x01000000
     Bank 2 = 16 Mbytes(4 MB Per Simm) Starting at 0x02000000
     Bank 3 = No Memory Detected

PCI Bus
     Bus 00  Slot 06: NCR     810 Scsi Controller
                                  pka0.7.0.6.0          SCSI Bus ID 7
                                  dka400.4.0.6.0         RRD43

     Bus 00  Slot 07: Intel   8275EB PCI to Eisa Bridge


     Bus 00  Slot 13: Compaq 1280/P

EISA Bus
     Slot 2  DEC4220               era0.0.0.2.1           08-00-2B-BC-93-7A
>>>
```

### 5.1.4.2 show device

The `show device` command displays the devices and controllers in the system. The device name convention is shown in Figure 5–2.

**Figure 5–2 Device Name Convention**

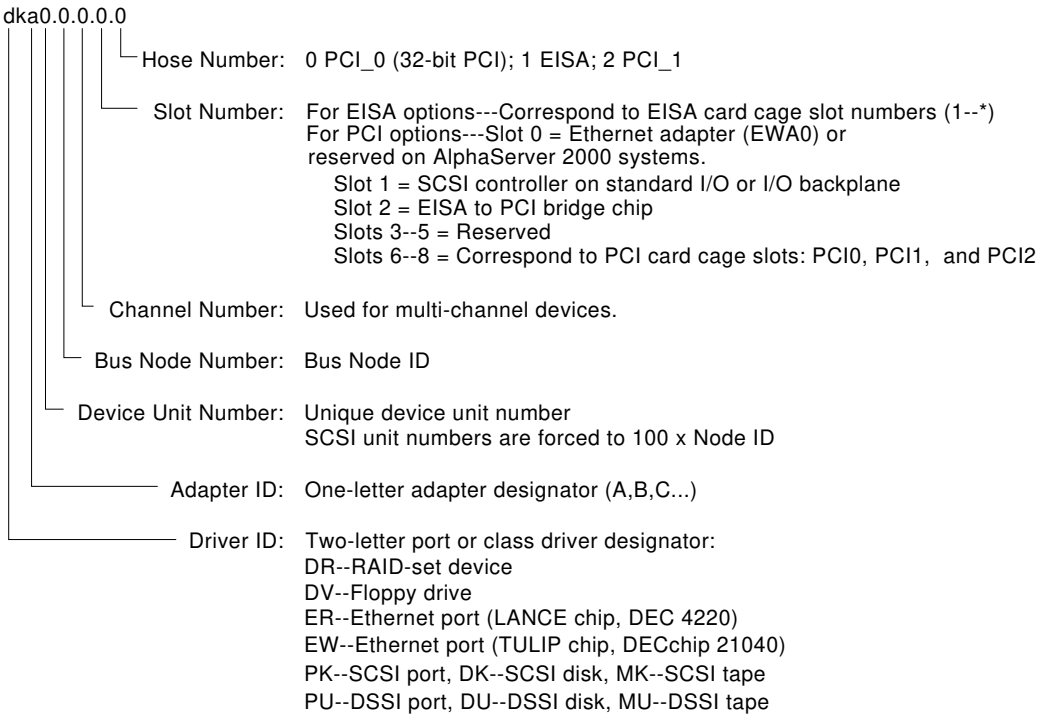


*Synopsis:*

show device [device_name]

*Argument:*

[device_name] The device name or device abbreviation. When abbreviations or wildcards are used, all devices that match the type are displayed.

*Example:*

```
>>> show device
    ❶                                   ❷                  ❸    ❹
dka400.4.0.6.0            DKA400                        RRD43  2893
dva0.0.0.0.1              DVA0
era0.0.0.2.1              ERA0              08-00-2B-BC-93-7A
pka0.7.0.6.0              PKA0                  SCSI Bus ID 7
>>>
```

❶ Console device name

❷ Node name (alphanumeric, up to 6 characters)

❸ Device type

❹ Firmware version (if known)

#### 5.1.4.3 show memory

The `show memory` command displays information for each bank of memory in the system.

*Synopsis:*

`show memory`

*Example:*

```
>>> show memory
     48 Meg of System Memory
     Bank 0 = 16 Mbytes(4 MB Per Simm) Starting at 0x00000000
     Bank 1 = 16 Mbytes(4 MB Per Simm) Starting at 0x01000000
     Bank 2 = 16 Mbytes(4 MB Per Simm) Starting at 0x02000000
     Bank 3 = No Memory Detected
>>>
```

#### 5.1.4.4 Setting and Showing Environment Variables

The environment variables described in Table 5–4 are typically set when you are configuring a system.

*Synopsis:*

set [-default] [-integer] -[string] envar value

**Note**

Whenever you use the `set` command to reset an environment variable, you must initialize the system to put the new setting into effect. You initialize the system by entering the `init` command or pressing the Reset button.

show envar

*Arguments:*

| | |
|---|---|
| envar | The name of the environment variable to be modified. |
| value | The value that is assigned to the environment variable. This may be an ASCII string. |

*Options:*

| | |
|---|---|
| -default | Restores variable to its default value. |
| -integer | Creates variable as an integer. |
| -string | Creates variable as a string (default). |

*Examples:*

```
>>> set bootdef_dev eza0
>>> show bootdef_dev
eza0
>>> show auto_action
boot
>>> set boot_osflags 0,1
>>>
```

**Table 5–4 Environment Variables Set During System Configuration**

| Variable | Attributes | Function |
|---|---|---|
| auto_action | NV,W | The action the console should take following an error halt or power failure. Defined values are:<br><br>BOOT—Attempt bootstrap.<br>HALT—Halt, enter console I/O mode.<br>RESTART—Attempt restart. If restart fails, try boot.<br><br>No other values are accepted. Other values result in an error message, and the variable remains unchanged. |

Key to variable attributes:

NV —- Nonvolatile. The last value saved by system software or set by console commands is preserved across system initializations, cold bootstraps, and long power outages.
W —- Warm nonvolatile. The last value set by system software is preserved across warm bootstraps and restarts.

(continued on next page)

**Table 5–4 (Cont.) Environment Variables Set During System Configuration**

| Variable | Attributes | Function |
|---|---|---|
| bootdef_dev | NV | The device or device list from which booting is to be attempted, when no path is specified on the command line. Set at factory to disk with Factory Installed Software; otherwise NULL. |
| boot_file | NV,W | The default file name used for the primary bootstrap when no file name is specified by the `boot` command. The default value when the system is shipped is NULL. |
| boot_osflags | NV,W | Default additional parameters to be passed to system software during booting if none are specified by the `boot` command.<br><br>**OpenVMS:** On the OpenVMS Alpha operating system, these additional parameters are the root number and boot flags. The default value when the system is shipped is NULL.<br><br>**DEC OSF/1:** The following parameters are used with the DEC OSF/1 operating system:<br><br>a Autoboot. Boots /vmunix from bootdef_dev, goes to multiuser mode. Use this for a system that should come up automatically after a power failure.<br><br>s Stop in single-user mode. Boots /vmunix to single-user mode and stops at the # (root) prompt.<br><br>i Interactive boot. Requests the name of the image to boot from the specified boot device. Other flags, such as -kdebug (to enable the kernel debugger), may be entered using this option.<br><br>D Full dump; implies ''s'' as well. By default, if DEC OSF/1 V3.x crashes, it completes a partial memory dump. Specifying ''D'' forces a full dump at system crash.<br><br>Common settings are a, autoboot; and Da, autoboot and create full dumps if the system crashes. |

Key to variable attributes:

NV —- Nonvolatile. The last value saved by system software or set by console commands is preserved across system initializations, cold bootstraps, and long power outages.
W —- Warm nonvolatile. The last value set by system software is preserved across warm bootstraps and restarts.

(continued on next page)

**Table 5–4 (Cont.) Environment Variables Set During System Configuration**

| Variable | Attributes | Function |
|---|---|---|
| console | NV | Sets the device on which power-up output is displayed.<br><br>GRAPHICS—Sets the power-up output to be displayed at a graphics terminal or device connected to the VGA module at the rear of the system.<br>SERIAL—Sets the power-up output to be displayed on the device that is connected to the COM1 port at the rear of the system. |
| ew*0_mode | NV | Sets the Ethernet controller to the default Ethernet device type.<br><br>''aui''—Sets the default Ethernet device to AUI.<br>''twisted''—Sets the default Ethernet device to 10BASE-T (twisted-pair).<br>''auto''—Reads the device connected to the Ethernet port and sets the default to the appropriate Ethernet device type. (This option is not implemented at product introduction.) |
| er*0_protocols,<br>ew*0_protocols | NV | Determines which network protocols are enabled for booting and other functions.<br><br>''mop''—Sets the network protocol to mop: the setting typically used for systems using the OpenVMS operating system.<br>''bootp''—Sets the network protocol to bootp: the setting typically used for systems using the DEC OSF/1 operating system.<br>''bootp,mop''—When the settings are used in a list, the mop protocol is attempted first, followed by bootp. |

Key to variable attributes:

NV —- Nonvolatile. The last value saved by system software or set by console commands is preserved across system initializations, cold bootstraps, and long power outages.
W —- Warm nonvolatile. The last value set by system software is preserved across warm bootstraps and restarts.

(continued on next page)

**Table 5–4 (Cont.) Environment Variables Set During System Configuration**

| Variable | Attributes | Function |
|---|---|---|
| os_type | NV | Sets the default operating system.<br>''vms'' or ''osf''—Sets system to boot the SRM firmware.<br>''nt''—Sets system to boot the ARC firmware. |
| pci_parity | NV | Disables or enables parity checking on the PCI bus.<br>''on''—Enables parity checking for all devices on the PCI bus.<br>''off''—Disables parity checking for all devices on the PCI bus. |
| pk*0_fast | NV | Enables Fast SCSI devices on a SCSI controller to perform in standard or fast mode.<br>0—Sets the default speed for devices on the controller to standard SCSI.<br>If a controller is set to standard SCSI mode, both standard and Fast SCSI devices will perform in standard mode.<br>1—Sets the default speed for devices on the controller to Fast SCSI mode.<br>Devices on a controller that connect to both standard and Fast SCSI devices will automatically perform at the appropriate rate for the device, either fast or standard mode. |
| pk*0_host_id | NV | Sets the controller host bus node ID to a value between 0 and 7.<br>0 to 7—Assigns bus node ID for specified host adapter. |

Key to variable attributes:

NV —- Nonvolatile. The last value saved by system software or set by console commands is preserved across system initializations, cold bootstraps, and long power outages.
W —- Warm nonvolatile. The last value set by system software is preserved across warm bootstraps and restarts.

**Note**

Whenever you use the `set` command to reset an environment variable, you must initialize the system to put the new setting into effect. Initialize the system by entering the `init` command or pressing the Reset button.

## 5.2 System Bus Options

The system bus interconnects the CPU and memory modules. Figure 5–3 shows the card cage and bus locations.

**Figure 5–3 Card Cages and Bus Locations**

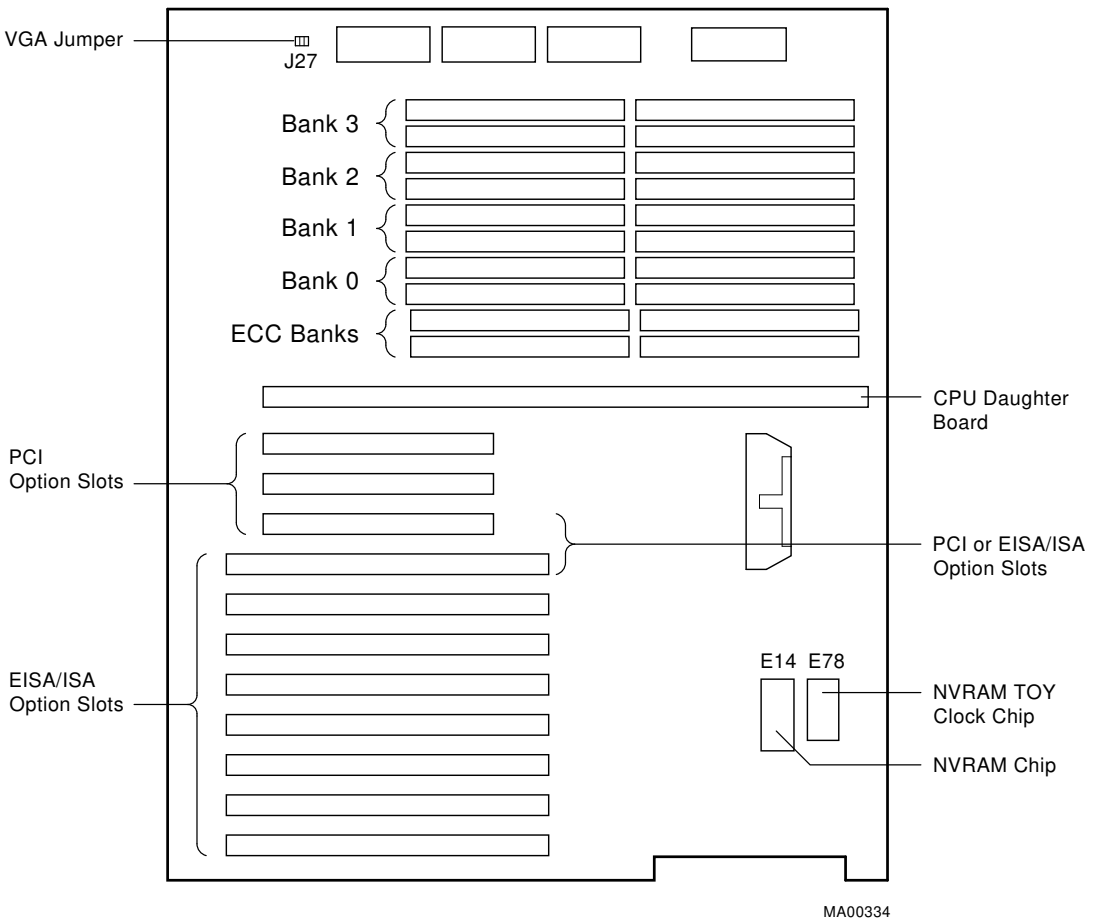


**Note**

If the top EISA connector is used (slot 8), the bottom PCI slot (slot 11) cannot be used. If the bottom PCI slot is used, the top EISA slot cannot be used.

### 5.2.1 CPU Daughter Board

AlphaServer 1000 systems use a CPU daughter board. The daughter board provides:

- The DECchip 21064 processor
- 2 megabytes of backup cache
- APECS chipset, which provides logic for external access to the cache for main memory control, and the PCI bus interface
- SROM code (SROM tests are controlled by jumper J6 on the CPU daughter board)

### 5.2.2 Memory Modules

AlphaServer 1000 systems can support from 16 megabytes to 512 megabytes of memory. Memory options consist of five single in-line memory modules (SIMMs) and are available in the following variations:

- 16-megabyte (consisting of five 4-megabyte SIMMs)
- 32-megabyte (consisting of five 8-megabyte SIMMs)
- 64-megabyte (consisting of five 16-megabyte SIMMs)
- 128-megabyte (consisting of five 32-megabyte SIMMs)

The motherboard has 20 SIMM connectors. The SIMM connectors are grouped in four memory banks (0, 1, 2, and 3) and one bank for ECC (Error Correction Code) memory (Figure 5–4).

#### Memory Configuration Rules

Observe the following rules when configuring memory on AlphaServer 1000 systems:

- Bank 0 must contain a memory option (5 SIMMs–0, 1, 2, 3, and 1 ECC SIMM).
- A memory option consists of five SIMMs (0, 1, 2, 3 and 1 ECC SIMM for the bank).
- All SIMMs within a bank must be of the same capacity.

Table 5–5 provides the memory requirements and recommendations for each operating system.

**Table 5–5 Operating System Memory Requirements**

| Operating System | Memory Requirements |
|---|---|
| DEC OSF/1 and OpenVMS | 32 MB minimum; 64 MB recommended |
| Windows NT | 16 MB minimum; 32 MB recommended |
| Windows NT Server | 32 MB minimum; 64 MB recommended |

**Figure 5–4 Memory Layout on the Motherboard**

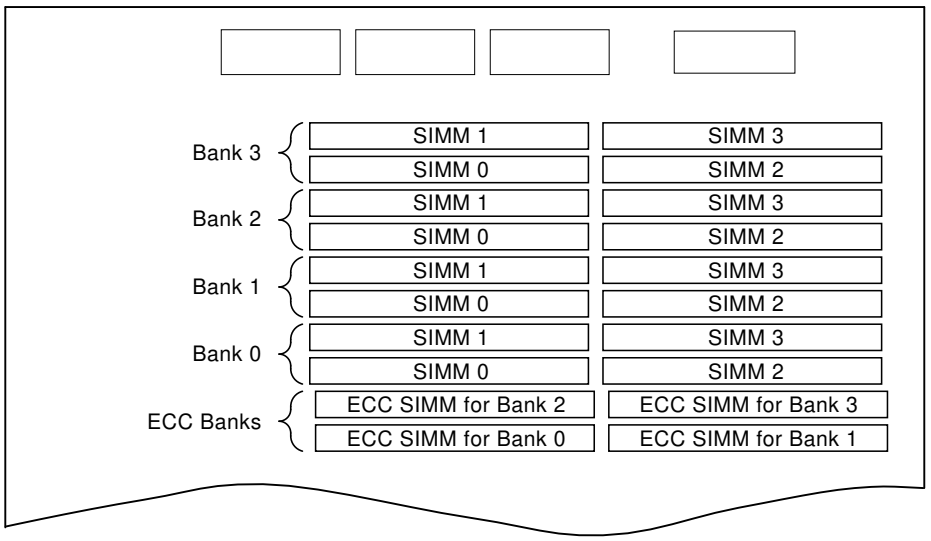


## 5.3 Motherboard

The motherboard provides a standard set of I/O functions:

- A Fast SCSI-2 controller chip that supports up to seven drives
- The firmware console subsystem on 1 MB of Flash ROM
- A floppy drive controller
- Two serial ports with full modem control and the parallel port
- The keyboard and mouse interface
- CIRRUS VGA controller

- The speaker interface
- PCI-to-EISA bridge chip set
- Time-of-year (TOY) clock
- Connectors:
  - EISA bus connectors (Slots 1-8)
  - PCI bus connectors (Slots 11, 12, and 13)

**Note**

If the top EISA connector is used (slot 8), the bottom PCI slot (slot 11) cannot be used. If the bottom PCI slot is used, the top EISA slot cannot be used.

  - Memory module connectors (20 SIMM connectors)
  - CPU daughter board connector

## 5.4 EISA Bus Options

The EISA bus (Extended Industry Standard Architecture) is a 32-bit industry standard I/O bus. EISA is a superset of the well-established ISA bus. EISA was designed to accept newer 32-bit components while remaining compatible with older 8-bit and 16-bit cards.

EISA offers performance of up to 33 MB/sec for bus masters and DMA devices. Up to eight EISA or ISA modules can reside in the EISA bus portion of the card cage. All slots are bus master slots. EISA slots can be filled in any order.

**Warning:** For protection against fire, only modules with current-limited outputs should be used.

## 5.5 ISA Bus Options

The ISA bus (Industry Standard Architecture) is an industry-standard, 16-bit I/O bus. The EISA bus is a superset of the well-established ISA bus and has been designed to be backward compatible with 16-bit and 8-bit architecture. Therefore, ISA modules can be used in AlphaServer 1000 systems, provided the operating system supports the device.

Up to eight ISA (or EISA) modules can reside in the EISA bus portion of the card cage. Refer to Section 5.6 for information on using the EISA Configuration Utility (ECU) to configure ISA options.

**Warning:** For protection against fire, only modules with current-limited outputs should be used.

### 5.5.1 Identifying ISA and EISA options

By examining the contacts of the option board you can determine whether a board is EISA or ISA (Figure 5–5):

- ISA boards have one row of contacts and no more than one gap.
- EISA boards have two interlocking rows of contacts with several gaps.

**Figure 5–5 ISA and ISA Boards**

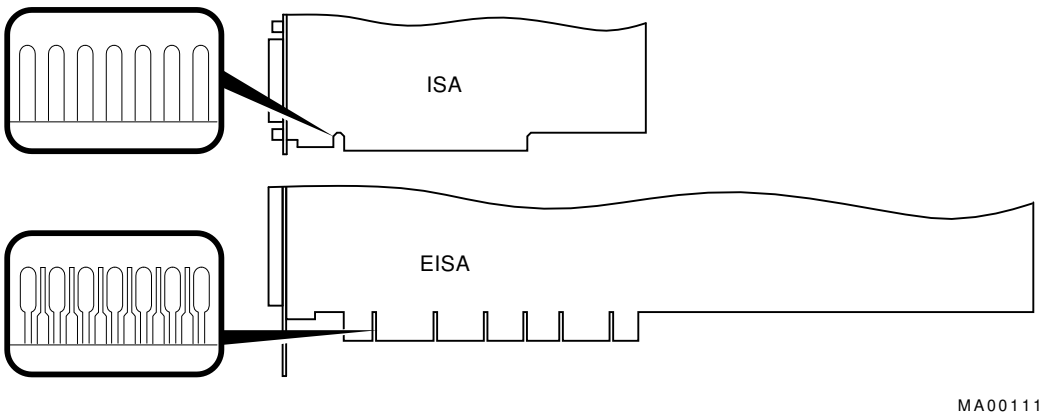


## 5.6 EISA Configuration Utility

Whenever you add, remove, or move an EISA or ISA board in the system, you will need to run a utility called the EISA Configuration Utility (ECU). Each EISA or ISA board has a corresponding configuration (CFG) file, which describes the characteristics and the system resources required for that option. The ECU uses the CFG file to create a conflict-free configuration. The ECU is a menu-based utility that provides online help to guide you through the configuration process. The ECU is run from the ARC menu interface.

The ECU is supplied on the two System Configuration Diskettes shipped with the system. Make a backup copy of the system configuration diskette and keep the original in a safe place. Use the backup copy when you are configuring the system. The system configuration diskette must have the volume label ''SYSTEMCFG.''

**Note**

The CFG files supplied with the option you want to install may not work on this system if the option is not supported. Before you install an option, check that the system supports the option.

### 5.6.1 Before You Run the ECU

Before running the ECU:

1. Install EISA option(s). (Install ISA boards *after* you run the ECU.)

   For information about installing a specific option, refer to the documentation for that option.

2. Familiarize yourself with the utility.

   You can find more information about the ECU by reading the ECU online help. To read the online help, start the ECU (refer to Section 5.6.2). Online help for the ECU is located under Step 1, ''Important EISA Configuration Information.''

3. Familiarize yourself with the configuration procedure for the system:

   - If you are configuring an EISA bus that contains only EISA options, refer to Table 5–6.
   - If you are configuring an EISA bus that contains both ISA and EISA options, refer to Table 5–7.

4. Locate the ECU diskette for your operating system. The ECU diskette is shipped in the accessories box with the system. Make a copy of the appropriate diskette and keep the original in a safe place. Use the backup copy for configuring options. The diskettes are labeled as follows:

   - ECU Diskette DECpc AXP (AK-PYCJ*-CA) for Windows NT
   - ECU Diskette DECpc AXP (AK-Q2CR*-CA) for DEC OSF/1 and OpenVMS

### 5.6.2 How to Start the ECU

Complete the following steps to run the ECU:

1. Invoke the console firmware.
   - **For systems running Windows NT**—Shut down the operating system or power up to the console Boot menu.
   - **For systems running OpenVMS or DEC OSF/1**—Shut down the operating system and press the Halt button or power up with the Halt button set to the ''in'' position. When the console prompt >>> is displayed, set the Halt button to the ''out'' position.
2. Start the ECU as follows:

   **Note**

   Make sure the ECU diskette is not write-protected.

   - **For systems running Windows NT**—Select the following menus:
     a. From the Boot menu, select the Supplementary menu.
     b. From the Supplementary menu, select the Setup menu. Insert the ECU diskette for Windows NT (AK-PYCJ*-CA) into the diskette drive.
     c. From the Setup menu, select ''Run EISA configuration utility from floppy.'' This boots the ECU program.
   - **For systems running OpenVMS or DEC OSF/1**—Start the ECU as follows:
     a. Insert the ECU diskette for OpenVMS or DEC OSF/1 (AK-Q2CR*-CA) into the diskette drive.
     b. Enter the `ecu` command.

        The system displays ''loading ARC firmware.'' Loading the ARC firmware takes approximately 2 minutes. When the firmware is done loading, the ECU program is booted.
3. Complete the ECU procedure according to the guidelines provided in the following sections.
   - If you are configuring an EISA bus that contains only EISA options, refer to Table 5–6.

**Note**

If you are configuring only EISA options, do not perform Step 2 of the ECU, ''Add or remove boards.'' (EISA boards are recognized and configured automatically.)

- If you are configuring an EISA bus that contains both ISA and EISA options, refer to Table 5–7.

4. After you have saved configuration information and exited from the ECU:
   - **For systems running Windows NT**—Remove the ECU diskette from the diskette drive and boot the operating system.
   - **For systems running OpenVMS or DEC OSF/1**—Remove the ECU diskette from the diskette drive. Return to the SRM console firmware as follows:
     a. From the Boot menu, select the Supplementary menu.
     b. From the Supplementary menu, select ''Set up the system.'' The Setup menu is then displayed.
     c. From the Setup menu, select ''Switch to OpenVMS or OSF console.''
     d. Select your operating system console, then press enter on the ''Setup menu.''
     e. When the ''Power-cycle the system to implement the change'' message is displayed, press the Reset button. (Do not press the On/Off switch.) Once the console firmware is loaded and device drivers are initialized, you can boot the operating system.
5. Verify that the new options are configured correctly.

### 5.6.3 Configuring EISA Options

EISA boards are recognized and configured automatically. Study Table 5–6 for a summary of steps to configure an EISA bus that contains no ISA options. Review Section 5.6.1. Then run the ECU as described in Section 5.6.2.

**Note**

It is not necessary to run Step 2 of the ECU, ''Add or remove boards.'' (EISA boards are recognized and configured automatically.)

**Table 5–6 Summary of Procedure for Configuring EISA Bus (EISA Options Only)**

| Step | Explanation |
|---|---|
| Install EISA option. | Use the instructions provided with the EISA option. |
| Power up and run ECU. | If the ECU locates the required CFG configuration files, it displays the main menu. The CFG file for the option may reside on a configuration diskette packaged with the option or may be included on the system configuration diskette.<br><br>**Note**<br>It is not necessary to run Step 2 of the ECU, ''Add or remove boards.'' (EISA boards are recognized and configured automatically.) |
| View or Edit Details (optional). | The "View or Edit Details" ECU option is used to change user-selectable settings or to change the resources allocated for these functions (IRQs, DMA channels, I/O ports, and so on).<br><br>This step is not required when using the board's default settings. |
| Save your configuration and restart the system. | The "Save and Exit" ECU option saves your configuration information to the system's nonvolatile memory. |
| Return to the SRM console (DEC OSF/1 and OpenVMS systems only) and restart the system. | Refer to step 4 of Section 5.6.2 for operating-system-specific instructions. |

## 5.6.4 Configuring ISA Options

ISA boards are configured manually, whereas EISA boards are configured through the ECU software. Study Table 5–7 for a summary of steps to configure an EISA bus that contains both EISA and ISA options. Review Section 5.6.1. Then run the ECU as described in Section 5.6.2.

**Table 5–7 Summary of Procedure for Configuring EISA Bus with ISA Options**

| Step | Explanation |
|---|---|
| Install or move EISA option. Do not install ISA boards. | Use the instructions provided with the EISA option. ISA boards are installed after the configuration process is complete. |
| Power up and run ECU. | If you have installed an EISA option, the ECU needs to locate the CFG file for that option. This file may reside on a configuration diskette packaged with the option or may be included on the system configuration diskette. |
| Add the ISA board to the configuration list. | Use the "Add or Remove Boards" ECU option to add the CFG file for the ISA option and to select an acceptable slot for the option.<br>The CFG file for the option may reside on a configuration diskette packaged with the option or may be included on the system configuration diskette.<br>If you cannot find the CFG file for the ISA option, select the generic CFG file for ISA options from the configuration diskette. |
| View or Edit Details (optional). | The "View or Edit Details" ECU option is used to change user-selectable settings or to change the resources allocated for these functions (IRQs, DMA channels, I/O ports, and so on). This step is not required when using the board's default settings. |
| Examine and set required switches to match the displayed settings. | The "Examine Required Switches" ECU option displays the correct switch and jumper settings that you must physically set for each ISA option. Although the ECU cannot detect or change the settings of ISA boards, it uses the information from the previous step to determine the correct switch settings for these options.<br>Physically set the board's jumpers and switches to match the required settings. |
| Save your configuration and turn off the system. | The "Save and Exit" ECU option saves your configuration information to the system's nonvolatile memory. |
| Return to the SRM console (DEC OSF/1 and OpenVMS systems only) and turn off the system. | Refer to step 4 of Section 5.6.2 for information about returning to the console. |
| Install ISA board and turn on the system. | Use the instructions provided with the ISA option. |

## 5.7 PCI Bus Options

PCI (Peripheral Component Interconnect) is an industry-standard expansion I/O bus that is the preferred bus for high-performance I/O options. The AlphaServer 1000 provides three slots for 32-bit PCI options. A PCI board is shown in Figure 5–6.

**Figure 5–6 PCI Board**

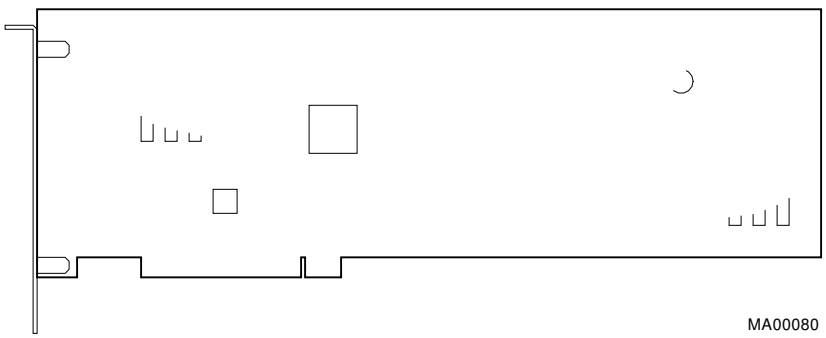


Install PCI boards according to the instructions supplied with the option. PCI boards require no additional configuration procedures; the system automatically recognizes the boards and assigns the appropriate system resources.

**Warning:** For protection against fire, only modules with current-limited outputs should be used.

## 5.8 SCSI Buses

A Fast SCSI-2 adapter on the system motherboard provides a single-ended SCSI bus for AlphaServer 1000 systems.

All tabletop or rackmounted SCSI-2 devices are supported through EISA- or PCI-based SCSI adapters. Use the following rules to determine whether a device can be used on your system:

- The device must be supported by the operating system. Consult the software product description or hardware vendor.
- No more than seven devices can be on any one SCSI-2 controller, and each must have a unique SCSI ID.

- The entire SCSI bus length, from terminator to terminator, must not exceed 6 meters for single-ended SCSI-2 at 5 MB/sec, or 3 meters for single-ended SCSI-2 at 10 MB/sec.

The Fast SCSI-2 adapter on the motherboard supports up to two 5.25-inch, internal half-height removable-media devices.

This bus can be extended to the internal StorageWorks shelf or an external expander to support up to seven drives.

The AlphaServer 1000 deskside ''wide tower'' supports an internal StorageWorks shelf that can support up to seven SCSI disk drives in a dual-bus configuration.

The backplane of the internal StorageWorks shelf supplies the drive's SCSI node ID according to the location of the drive within the storage shelf. Each internal StorageWorks shelf can be configured in one of two ways:

- Single bus — Up to seven drives, each with a unique node ID.
- Dual bus — Up to seven drives (bus A node IDs 0–3, bus B node IDs 0–2).

For AlphaServer 1000 enclosures, the internal storage shelf configuration is controlled by a StorageWorks jumper cable (17-03960-01).

### 5.8.1 Single Controller (On-Board) Configurations

Figure 5–7 shows the on-board controller configuration where the on-board controller connects the SCSI removable media devices, then enters the internal StorageWorks shelf. In this configuration, the StorageWorks shelf is split, and the bottom three storage slots are unused.

Figure 5–8 shows the on-board controller configuration where the on-board controller connects the SCSI removable media devices, then enters the internal StorageWorks shelf. In this configuration, the StorageWorks shelf is configured as a single bus.

**Figure 5–7 Single Controller Configuration with Dual Bus StorageWorks Shelf**

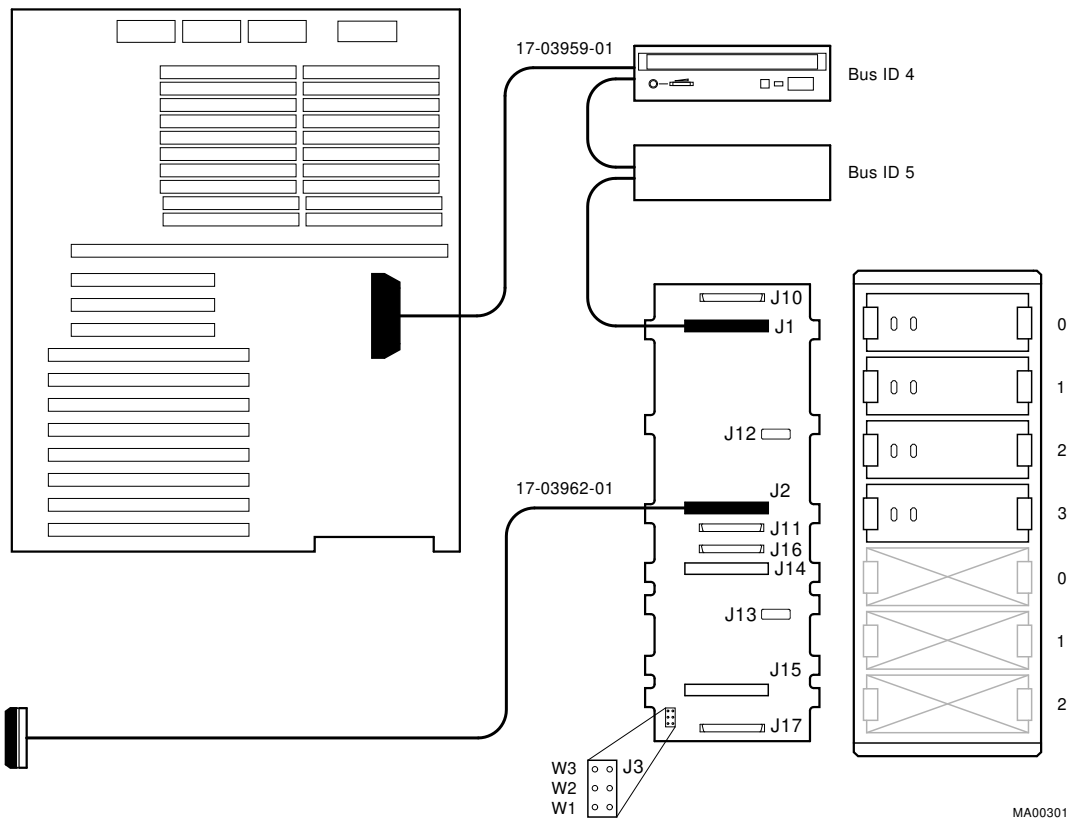

**Figure 5–8 Single Controller Configuration with Single Bus StorageWorks Shelf**

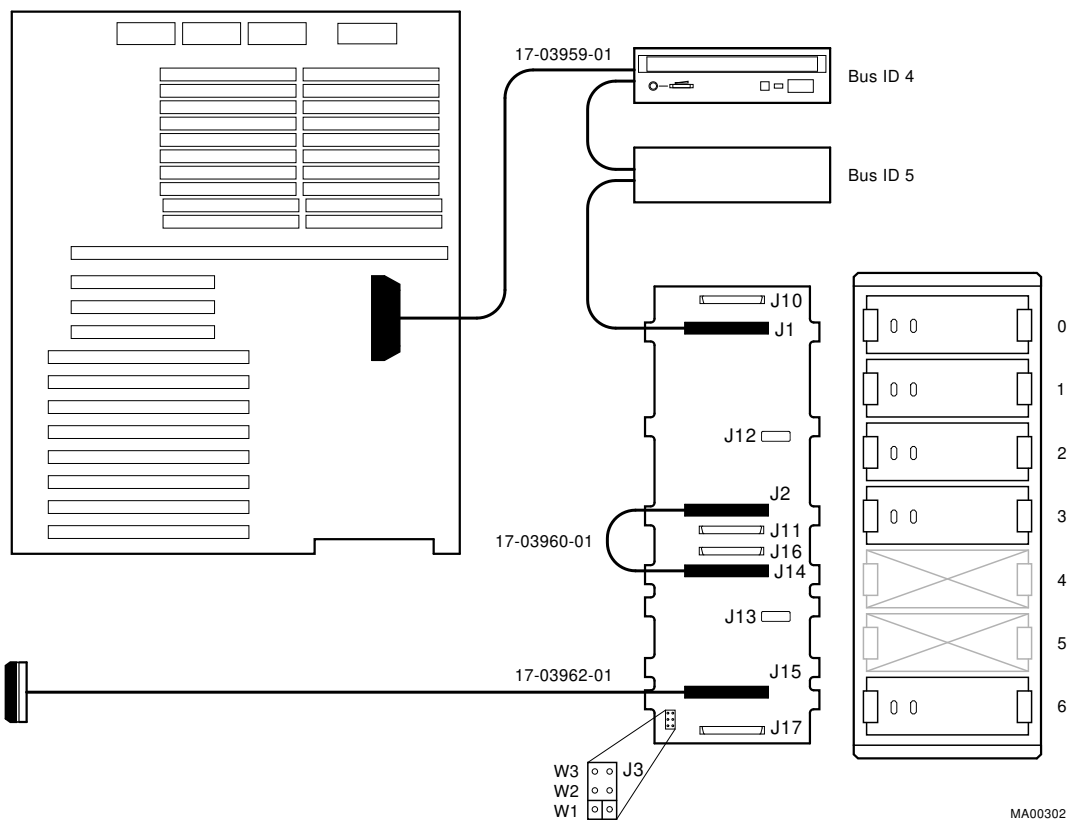

## 5.8.2 Multiple Controller Configurations

Figure 5–9 shows a configuration using two controllers. In this configuration the StorageWorks shelf is configured as a single bus.

Figure 5–10 shows a configuration using two controllers. In this configuration the StorageWorks shelf is configured as a dual bus.

**Figure 5–9 Dual Controller Configuration with Single Bus StorageWorks Shelf**

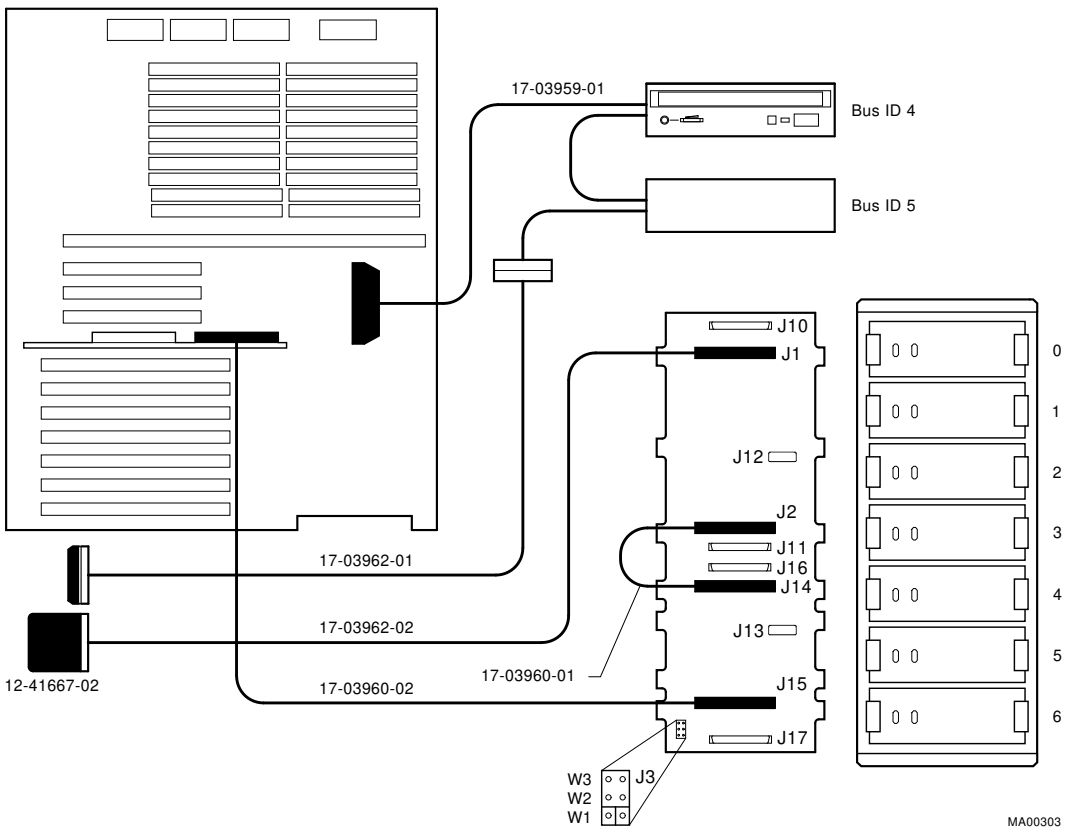

**Figure 5–10 Dual Controller Configuration with Dual Bus StorageWorks Shelf**

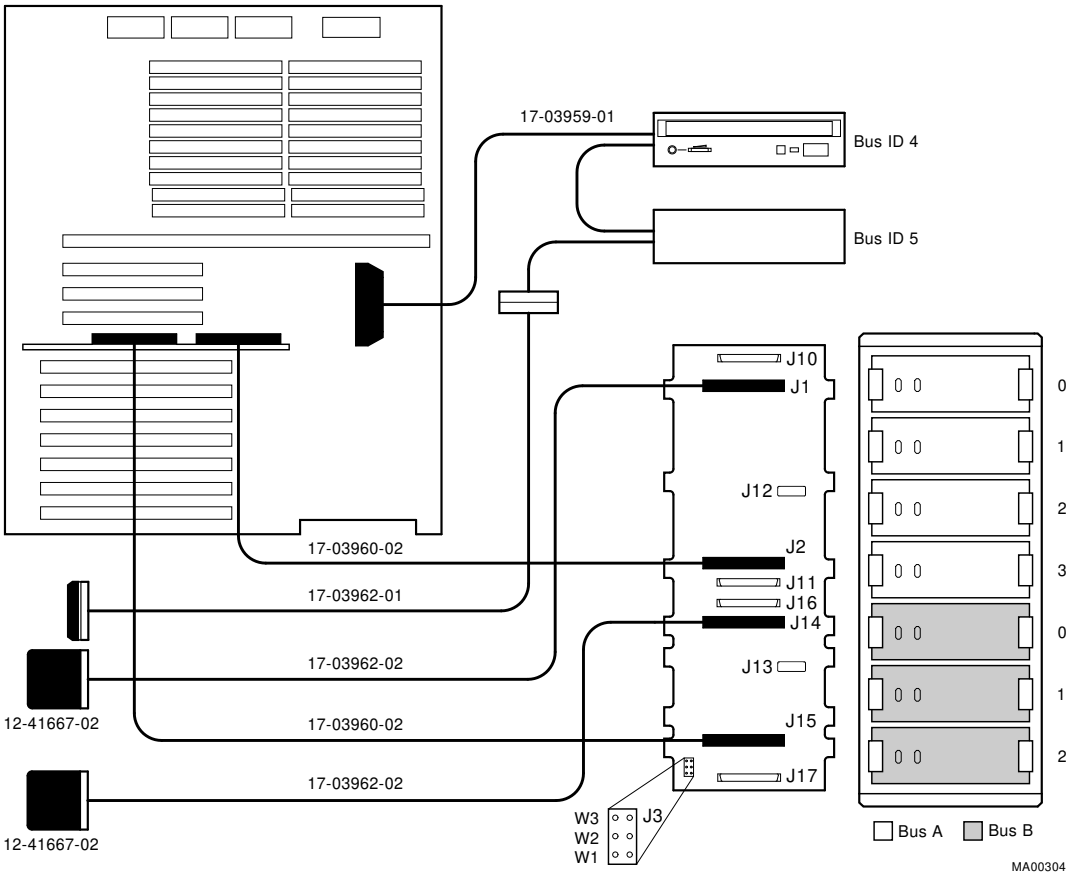

## 5.9 Power Supply Configurations

AlphaServer 1000 systems offer added reliability with redundant power options, as well as UPS options.

The power supplies for AlphaServer 1000 systems support two different modes of operation. In addition, UPS options are available. Refer to Figure 5–11.

Power supply modes of operation:

1. Single power supply
2. Dual power supply (redundant mode)—Provides redundant power (n + 1).

   In redundant mode, the failure of one power supply does not cause the system to shut down. Normal operation continues with no impact on the system.

   No jumper needs to be installed to activate redundant mode power.

   **Note**

   Total combined power of all outputs per supply cannot exceed 400 watts.

- 36 A or less of 3.3 V power
- 52 A or less of 5.0 V power
- 11 A or less of +12.0 V power
- 0.2 A or less of -12.0 V power
- 0.2 A or less of -5.0 V power
- The combination of 3.3 V power and 5.0 V power cannot exceed 335 watts.

**Figure 5–11 Power Supply Configurations**

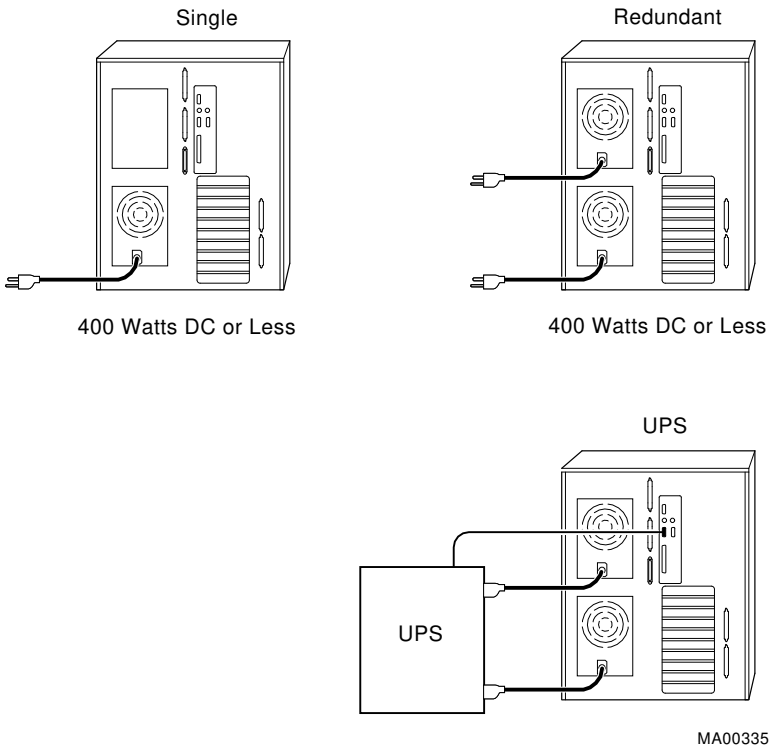

**Figure 5–12 Power Supply Cable Connections**

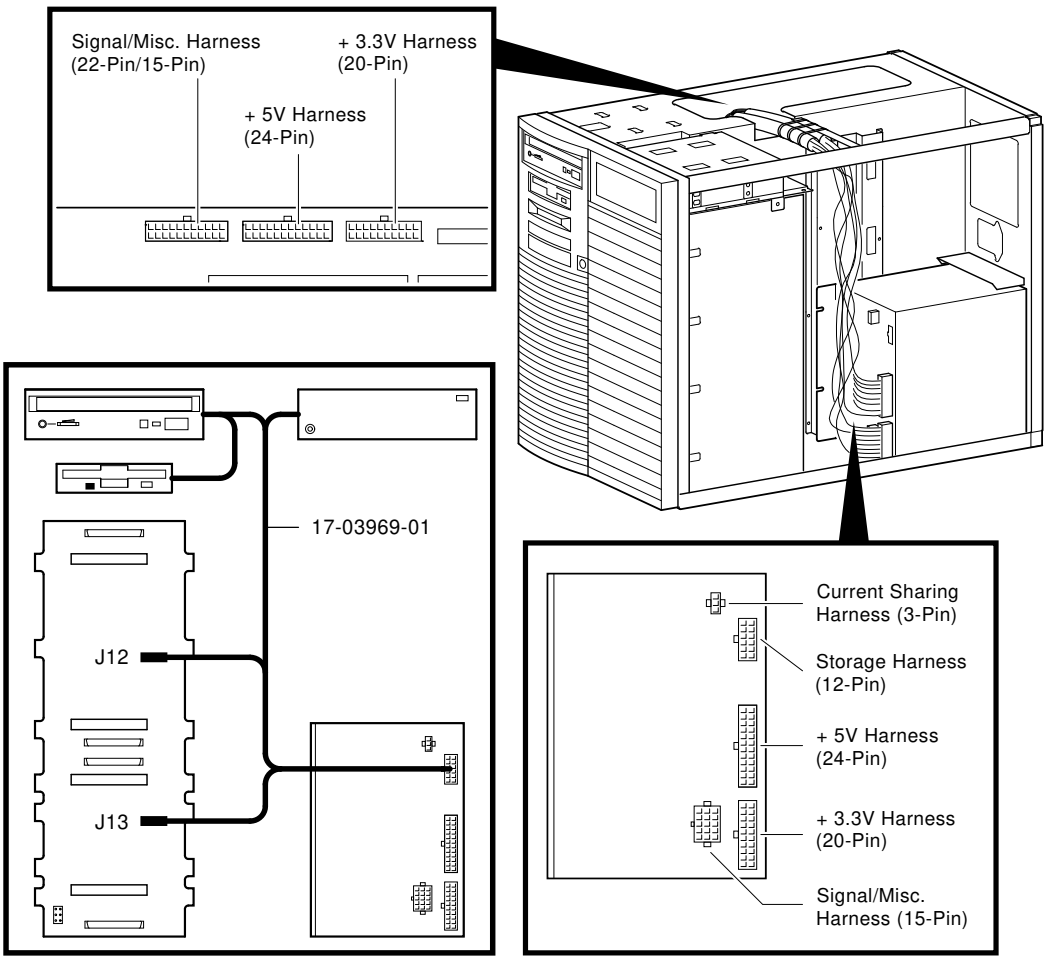

## 5.10 Console Port Configurations

Power-up information is typically displayed on the system's console terminal. The console terminal may be either a graphics terminal or a serial terminal (connected through the COM1 serial port). The setting of the console environment variable determines where the system will display power-up output. Set this environment variable according to the console terminal that you are using.

*Synopsis:*

set console output_device

*Arguments:*

| | |
|---|---|
| graphics | Displays the power-up output to a graphics terminal or device connected to the VGA module at rear of the system. |
| serial | Displays the power-up output to a device connected to the COM1 port at the rear of the system. |

**Note**

Whenever you use the `set` command to reset an environment variable, you must initialize the system to put the new setting into effect. Initialize the system by entering the `init` command or pressing the Reset button.

*Example:*

```
>>> set console serial
>>>
```

### VTxxx Console Terminal Setting for Running ECU

To run the EISA configuration utility (ECU) from the serial console port, the terminal needs to bet set for 8-bit controls, the keyboard needs to be set so that the tilde (~) key sends the escape (ESC) signal, and the console environment variable must be set to serial.

### Graphics Terminal Needed for Running RCU

A graphics terminal is needed to run the RAID configuration utility (RCU). To enable the on-board VGA logic, the VGA enable jumper (J27) on the motherboard must be enabled. The console environment variable must be set to graphics.

### Using a VGA Controller Other than the Standard On-Board VGA

When the system is configured to use a PCI- or EISA-based VGA controller instead of the standard on-board VGA (CIRRUS), consider the following:

- The on-board CIRRUS VGA options must be set to disabled through the ECU.
- The VGA jumper (J27) on the upper-left corner of the motherboard must then be set to disable (off).
- The console environment variable should be set to graphics.
- If there are multiple VGA controllers, the system will direct console output to the first controller it finds.

# 6

# AlphaServer 1000 FRU Removal and Replacement

This chapter describes the field-replaceable unit (FRU) removal and replacement procedures for AlphaServer 1000 systems, which use a deskside ‘‘wide-tower’’ enclosure.

- Section 6.1 lists the FRUs for AlphaServer 1000-series systems.
- Section 6.2 provides the removal and replacement procedures for the FRUs.

## 6.1 AlphaServer 1000 FRUs

Table 6–1 lists the FRUs by part number and description and provides the reference to the figure or section that shows the removal/replacement procedure.

Figures 6–1 and 6–2 show the locations of FRUs within the system.

Figures 6–3 and 6–4 show how to open the front door and remove the top cover and side panels.

**Table 6–1 AlphaServer 1000 FRUs**

| Part # | Description | Section |
|---|---|---|
| **Cables** | | |
| 17-03970-02 | Floppy drive cable (34-pin) | Figure 6–5 |
| 17-03971-01 | OCP module cable (10-pin) | Figure 6–6 |
| 17-00083-09 | Power cord | Figure 6–7 |
| 17-03964-01 | Power supply current sharing cable (3-pin) | Figure 6–8 |
| 70-31346-01 | Power supply DC cable assembly (signal /misc, 15-pin), (+5V, 24-pin), (+3.3V, 20-pin) | Figure 6–9 |
| 17-03969-01 | Power supply storage harness (12-pin) | Figure 6–10 |
| 70-32283-01 | Interlock/Server management cable (2-pin) | Figure 6–11 |
| 17-03960-01 | Internal StorageWorks jumper cable (50-pin) | Figure 6–12 |
| 17-03962-01 | SCSI (J15 StorageWorks shelf to bulkhead connector or bulkhead to multinode) cable (50-pin) | Figure 6–13, Figure 6–14 |
| 17-03962-02 | SCSI (J1 or J14 StorageWorks shelf to bulkhead connector) cable (50-pin) | Figure 6–15 |
| 17-03959-01 | SCSI (embedded 8-bit) multinode cable (50-pin) | Figure 6–16 |
| 17-03960-02 | SCSI RAID internal cable (50-pin) | Figure 6–17, Figure 6–18 |
| **CPU Modules** | | |
| 54-23297-01 | 200 MHz CPU daughter board | Section 6.2.2 |
| 54-23297-03 | 233 MHz CPU daughter board | Section 6.2.2 |
| **Fans** | | |
| 70-31350-01 | 92 mm fan | Section 6.2.3 |
| 70-31351-01 | 120 mm fan | Section 6.2.3 |

(continued on next page)

**Table 6–1 (Cont.) AlphaServer 1000 FRUs**

| Part # | Description | Section |
|---|---|---|
| **Internal StorageWorks** | | |
| RZnn -VA | StorageWorks disk drive | Section 6.2.4 |
| 54-23365-01 | Internal StorageWorks backplane | Section 6.2.5 |
| 17-03960-01 | Internal StorageWorks jumper cable (50-pin) | Figure 6–12 |
| **Memory Modules** | | |
| ME524-DE | 1 x 4MB SIMM | Section 6.2.6 |
| ME534-DE | 1 x 8MB SIMM | Section 6.2.6 |
| ME644-DE | 1 x 16MB SIMM | Section 6.2.6 |
| ME654-DE | 1 x 32MB SIMM | Section 6.2.6 |
| **Other Modules and Components** | | |
| 70-31348-01 | Interlock switch | Section 6.2.7 |
| 54-23308-01 | System bus motherboard | Section 6.2.8 |
| 21-29631-02 | NVRAM chip (E14) | Section 6.2.9 |
| 21-32423-01 | NVRAM TOY clock chip (E78) | Section 6.2.9 |
| 54-23302-02 | OCP module | Section 6.2.10 |
| 30-41976-01 | Power supply | Section 6.2.11 |
| 70-31349-01 | Speaker | Section 6.2.12 |
| 12-41297-01 | External SCSI terminator | |
| 12-41667-02 | External SCSI terminator (for use with SWXCR controller) | |
| 12-27351-01 | Serial port loopback connector (9-pin) | |
| 12-22196-01 | Ethernet thickwire loopback connector | |
| 12-35619-01 | Ethernet twisted-pair loopback connector | |
| H8223 | Ethernet BNC T connector | |
| H8225 | Ethernet BNC terminator (2) | |
| 74-50062-01 | Key for door | |

(continued on next page)

**Table 6–1 (Cont.) AlphaServer 1000 FRUs**

| Part # | Description | Section |
|---|---|---|
| **Removable Media** | | |
| RRDnn -CA | CD–ROM drives | Section 6.2.13 |
| TLZnn -LG | Tape drives | Section 6.2.13 |
| TZKnn -LG | Tape drives | Section 6.2.13 |
| RXnn -AA | Floppy drive | Section 6.2.13 |

**Figure 6–1 FRUs, Front Right**

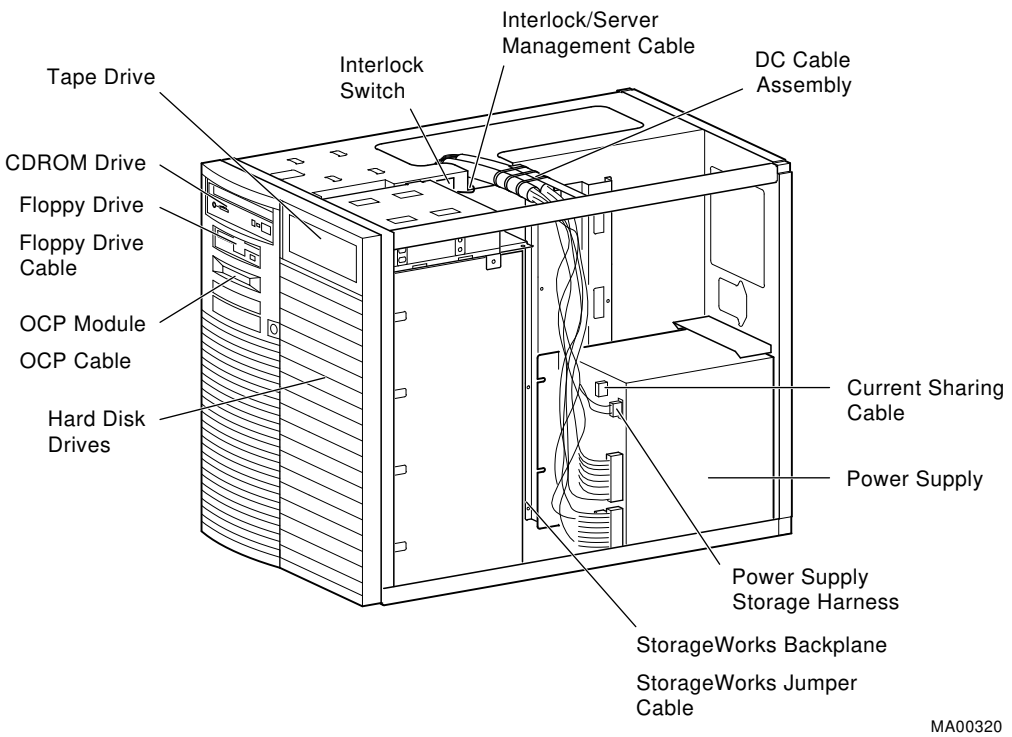

**Figure 6–2 FRUs, Rear Left**

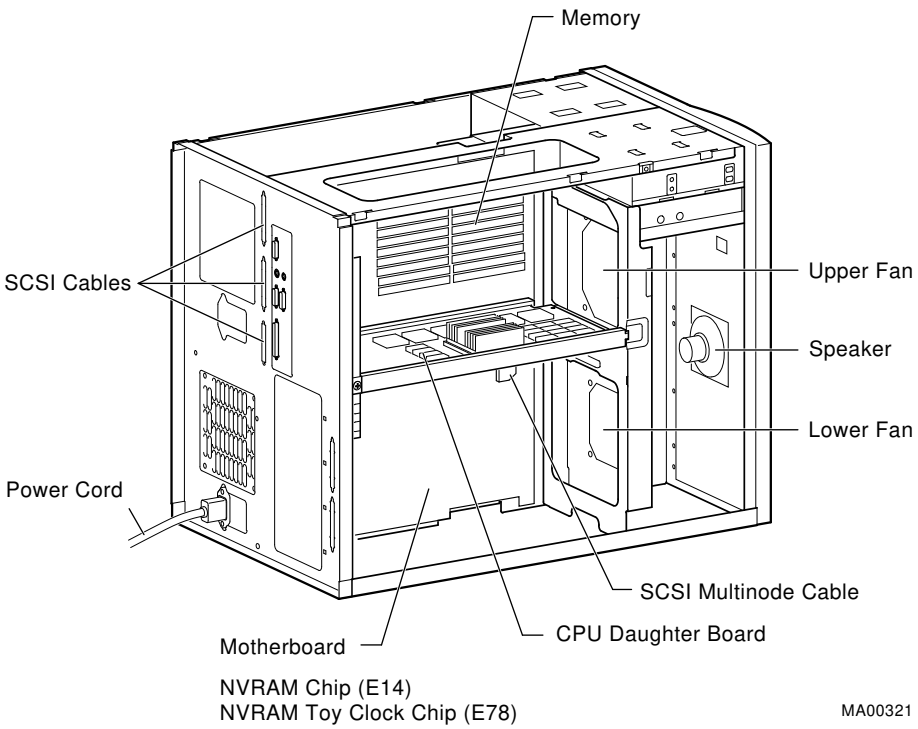

## 6.2 Removal and Replacement

This section describes the procedures for removing and replacing FRUs for AlphaServer 1000 systems, which use the deskside ‘‘wide-tower’’ enclosure.

**Caution:** Before removing the top cover and side panels:

1. Perform an orderly shutdown of the operating system.
2. Set the On/Off button on the operator control panel to off.
3. Unplug the AC power cords.

**Caution**

Static electricity can damage integrated circuits. Always use a grounded wrist strap (29-26246) and grounded work surface when working with internal parts of a computer system.

Unless otherwise specified, you can install an FRU by reversing the steps shown in the removal procedure.

**Figure 6–3 Opening Front Door**

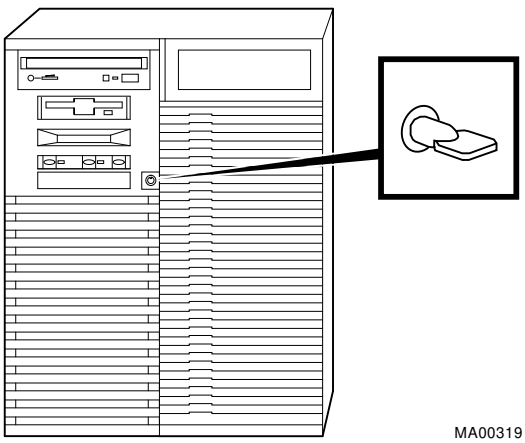

**Figure 6–4 Removing Top Cover and Side Panels**

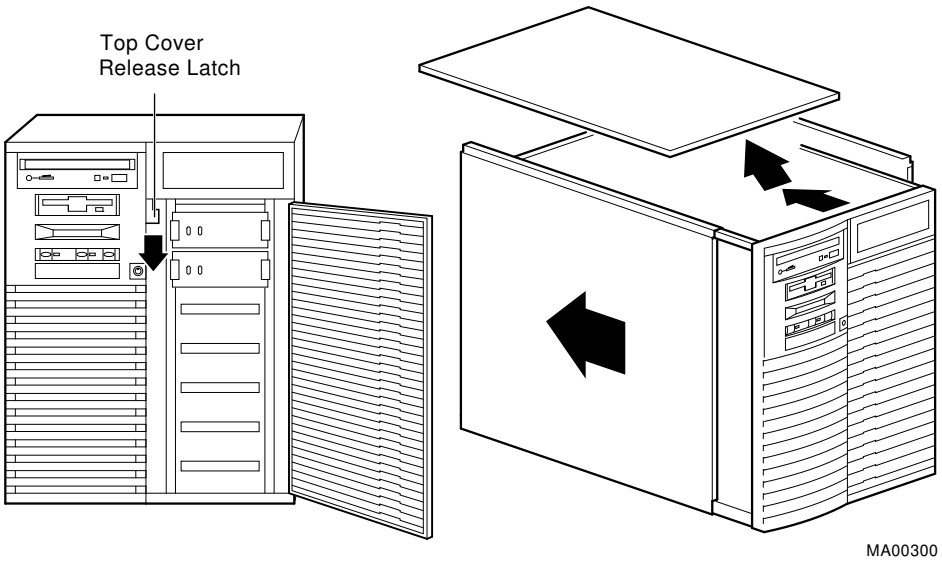

### 6.2.1 Cables

This section shows the routing for each cable in the system.

**Figure 6–5 Floppy Drive Cable (34-Pin)**

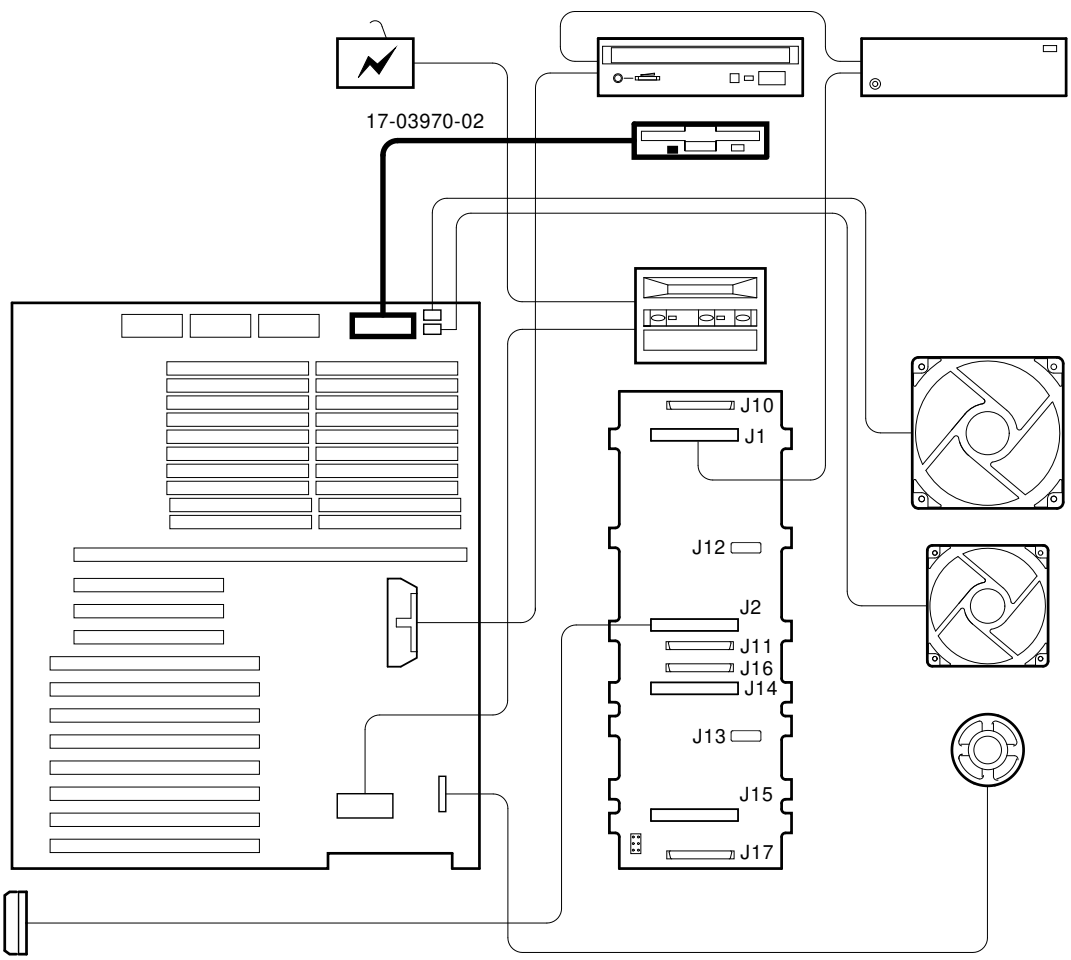

**Figure 6–6 OCP Module Cable (10-Pin)**

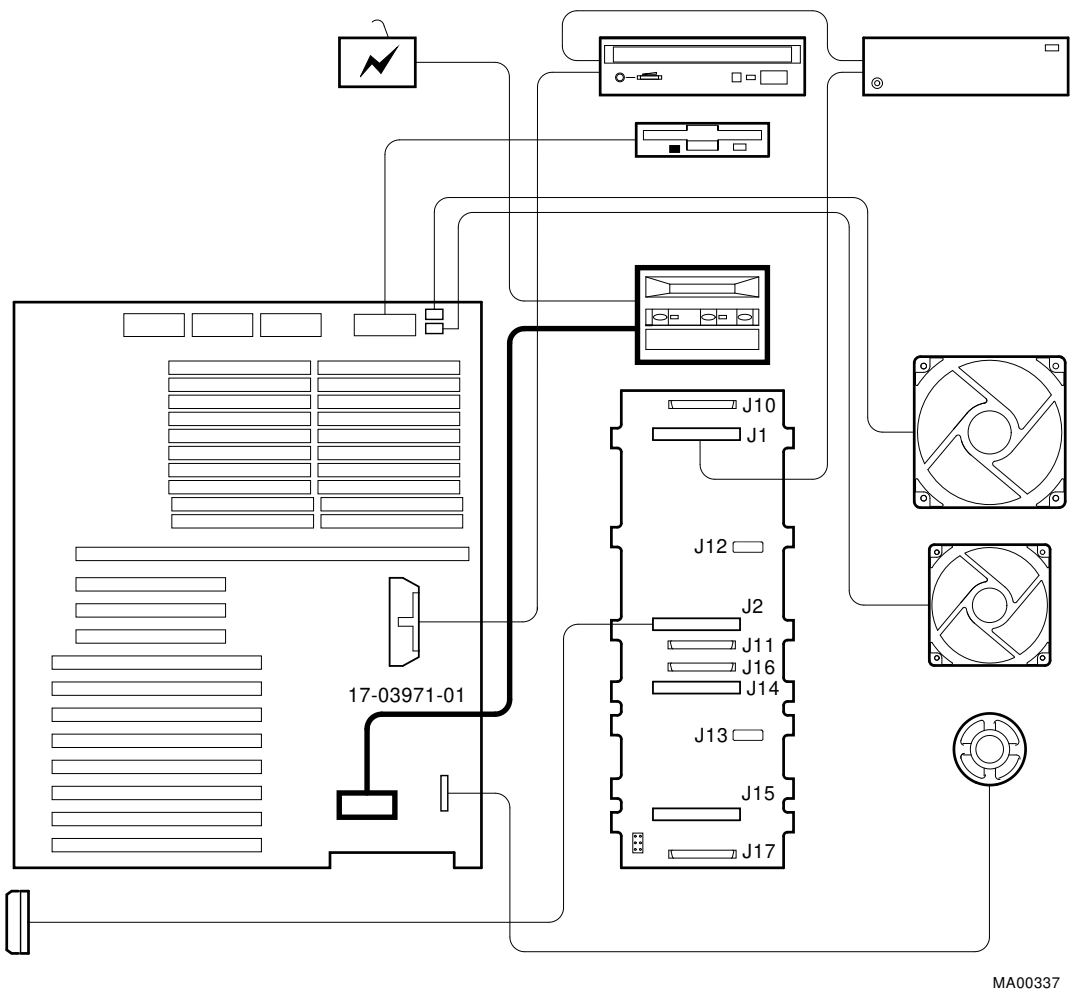

**Figure 6–7 Power Cord**

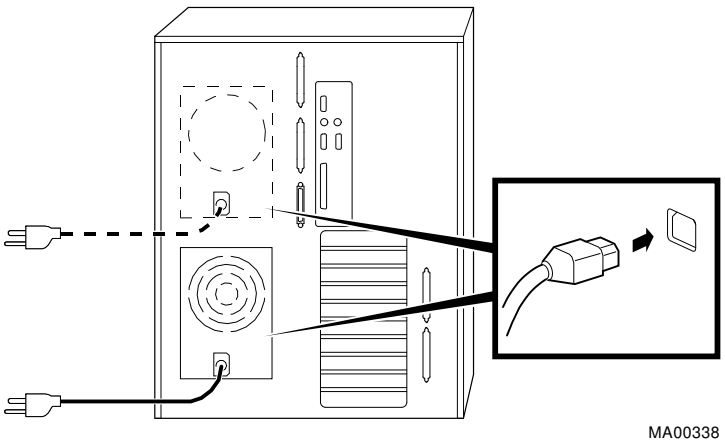


Table 6–2 lists the country-specific power cables.

**Table 6–2 Power Cord Order Numbers**

| Country | Power Cord BN Number | Digital Number |
|---|---|---|
| U.S., Japan, Canada | BN09A-1K | 17-00083-09 |
| Australia, New Zealand | BN019H-2E | 17-00198-14 |
| Central Europe (Aus, Bel, Fra, Ger, Fin, Hol, Nor, Swe, Por, Spa) | BN19C-2E | 17-00199-21 |
| U.K., Ireland | BN19A-2E | 17-00209-15 |
| Switzerland | BN19E-2E | 17-00210-13 |
| Denmark | BN19K-2E | 17-00310-08 |
| Italy | BN19M-2E | 17-00364-18 |
| India, South Africa | BN19S-2E | 17-00456-16 |
| Israel | BN18L-2E | 17-00457-16 |

**Figure 6–8 Power Supply Current Sharing Cable (3-Pin)**

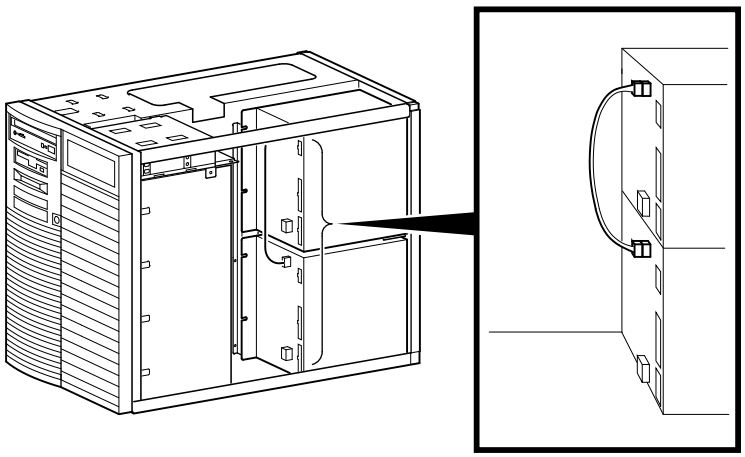

MA00339

**Figure 6–9 Power Supply DC Cable Assembly**

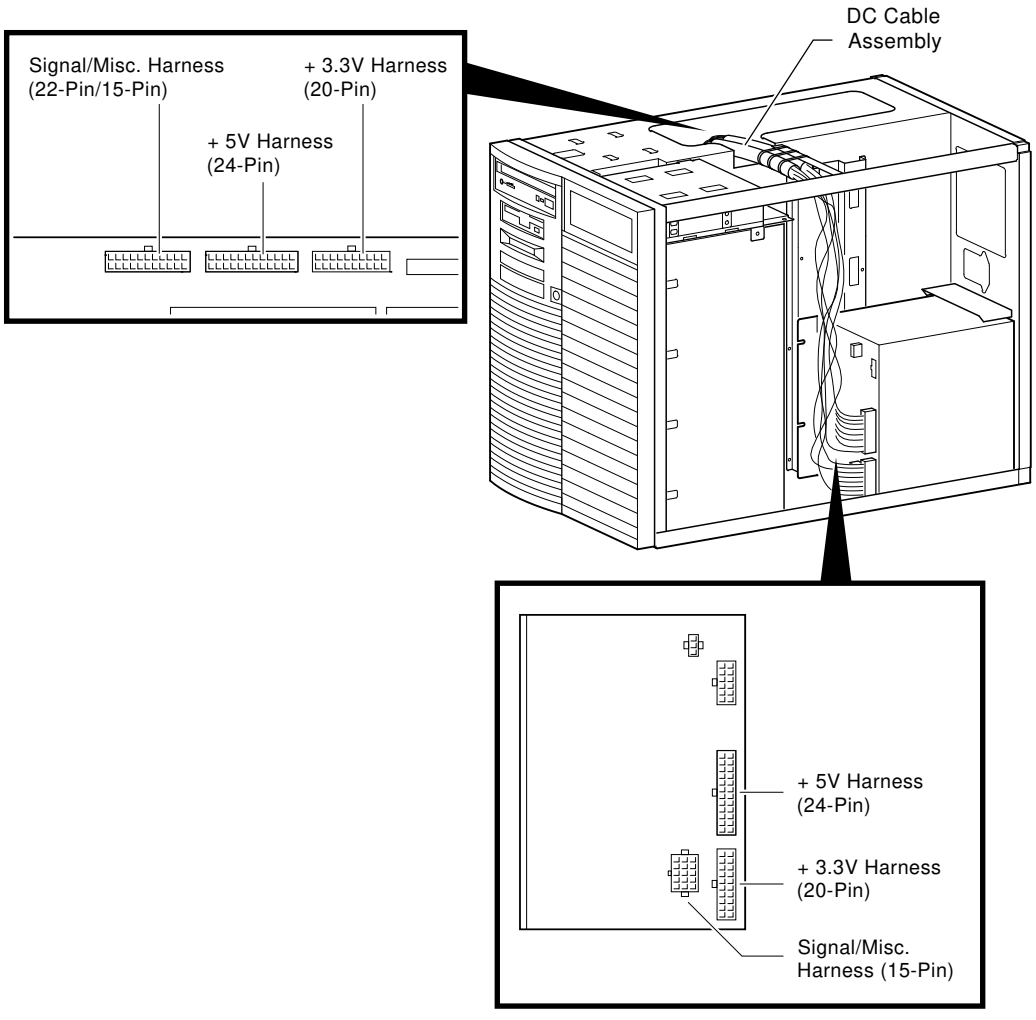


The power supply DC cable assembly contains the following cables:

- Power supply signal/misc cable (15-pin)
- Power supply +5V cable (24-pin)

- Power supply +3.3V (20-pin)

**Figure 6–10 Power Supply Storage Harness (12-Pin)**

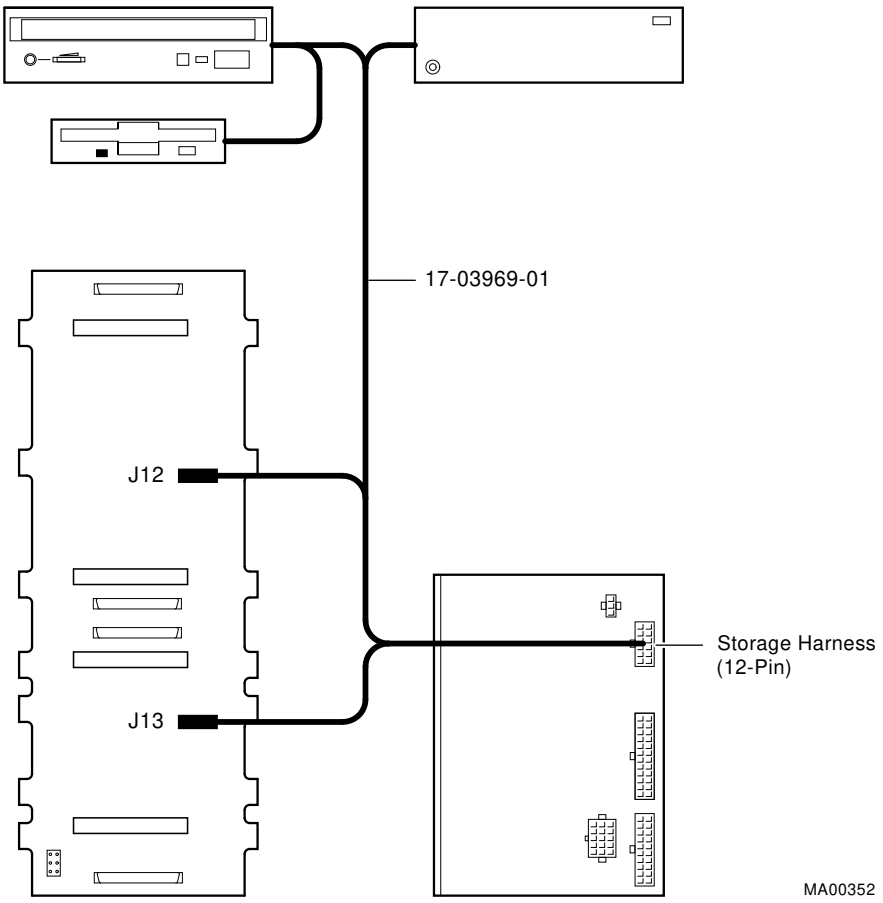

**Figure 6–11 Interlock/Server Management Cable (2-pin)**

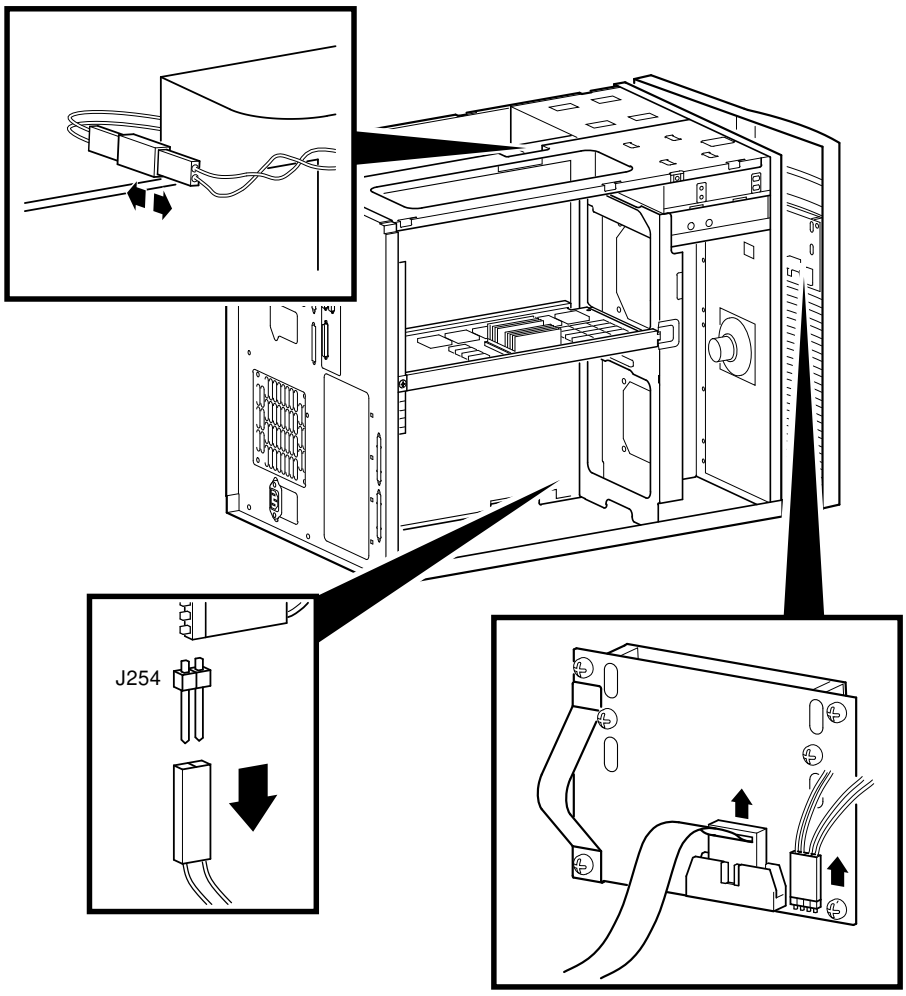

**Figure 6–12 Internal StorageWorks Jumper Cable (50-Pin)**

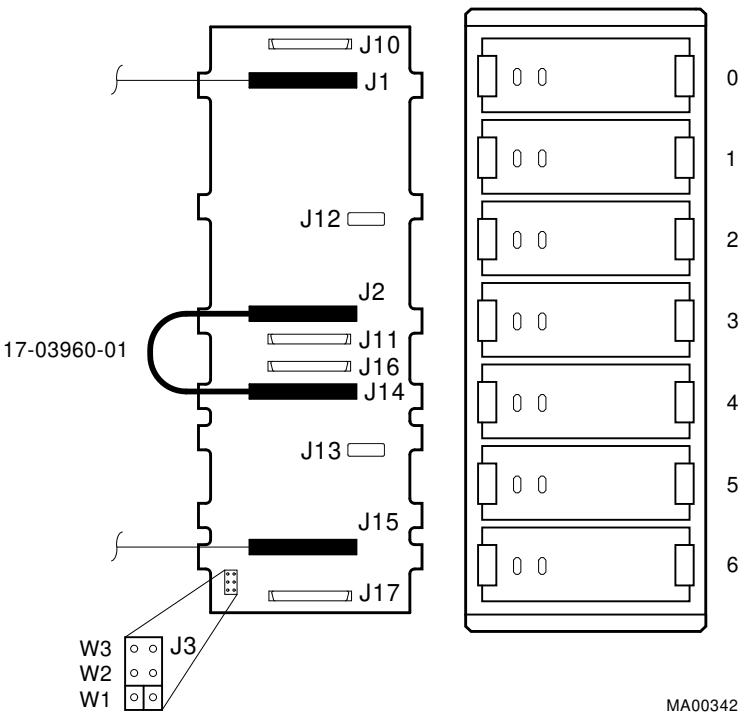

**Figure 6–13 SCSI (J15 StorageWorks Shelf to Bulkhead Connector or Bulkhead to Multinode) Cable (50-Pin)**

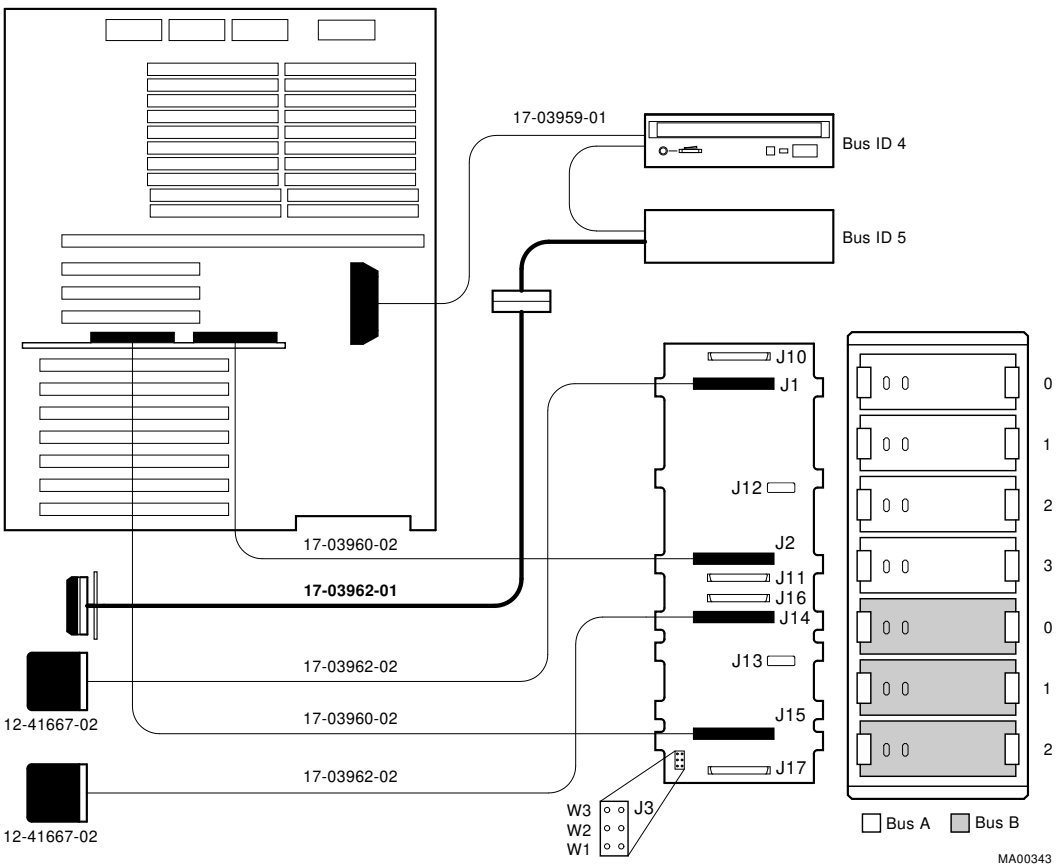


**Note**

Figure 6–13 shows the SCSI cable in the bulkhead to multinode cable configuration, Figure 6–14 shows the SCSI cable in the bulkhead to J15 Storageworks shelf configuration.

**Figure 6–14 SCSI (J15 StorageWorks Shelf to Bulkhead Connector or Bulkhead to Multinode) Cable (50-Pin)**

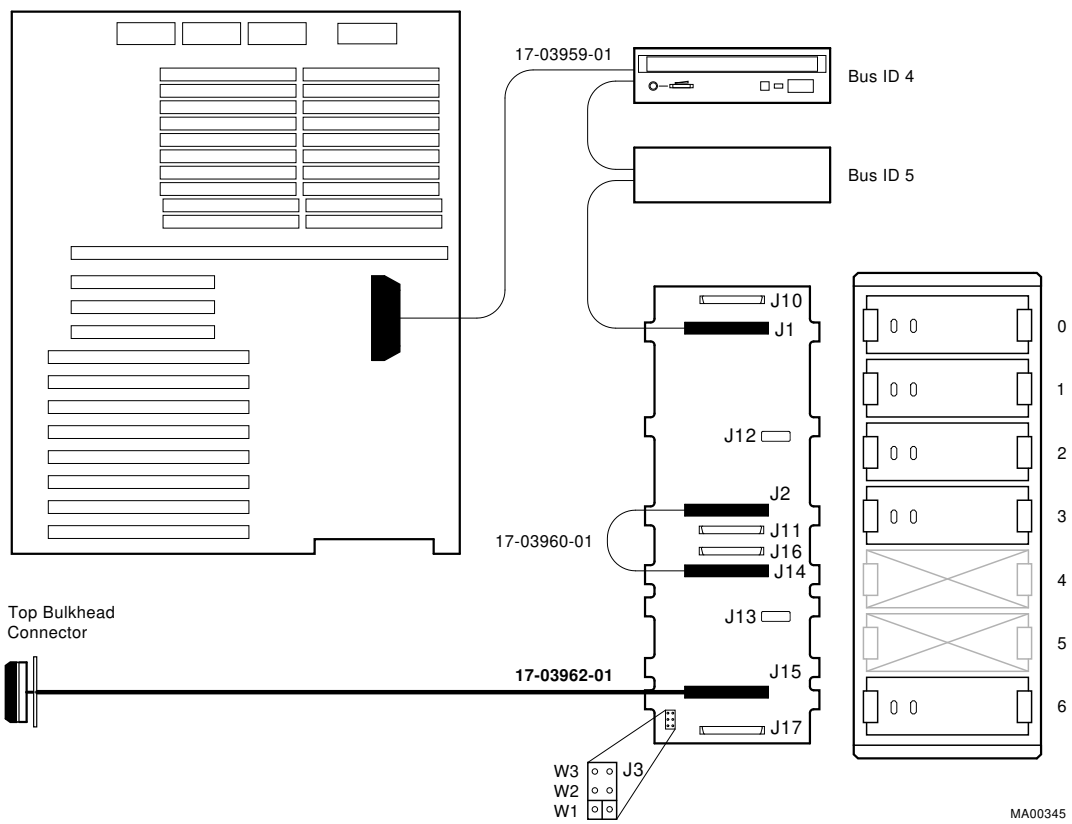

**Figure 6–15 SCSI (J1 or J14 StorageWorks Shelf to Bulkhead Connector) Cable (50-Pin)**

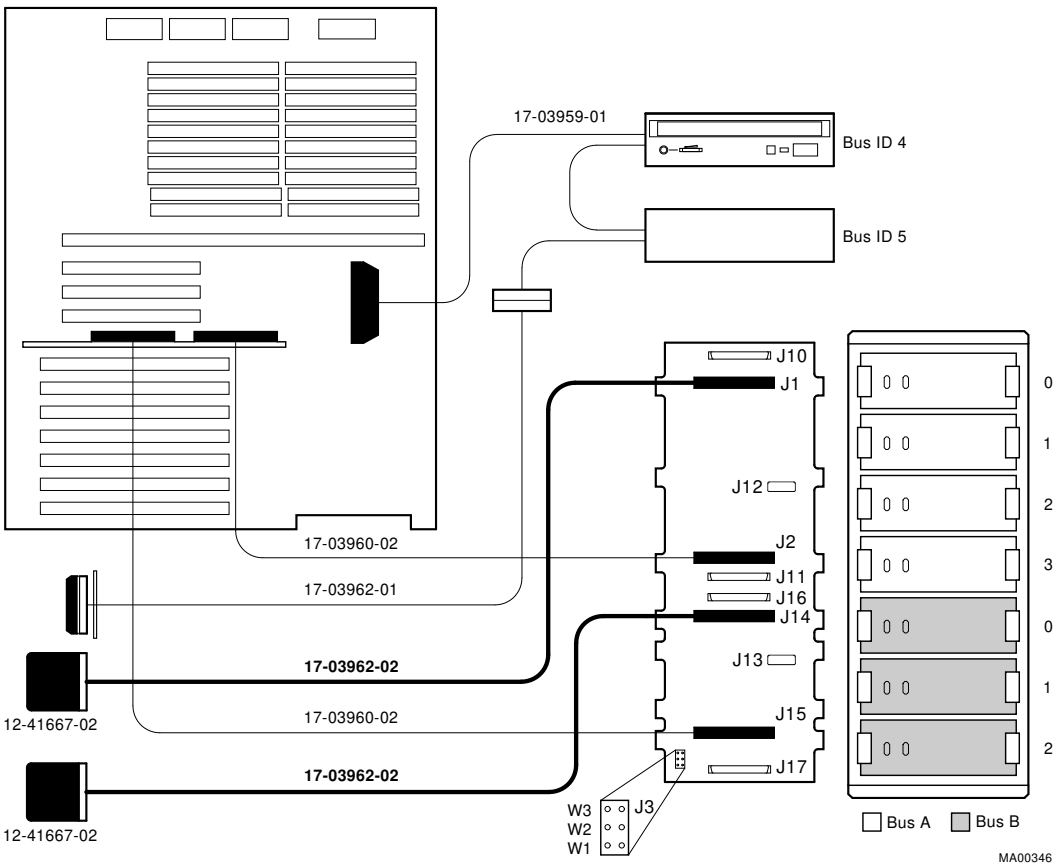

**Figure 6–16 SCSI (Embedded 8-bit) Multinode Cable (50-Pin)**

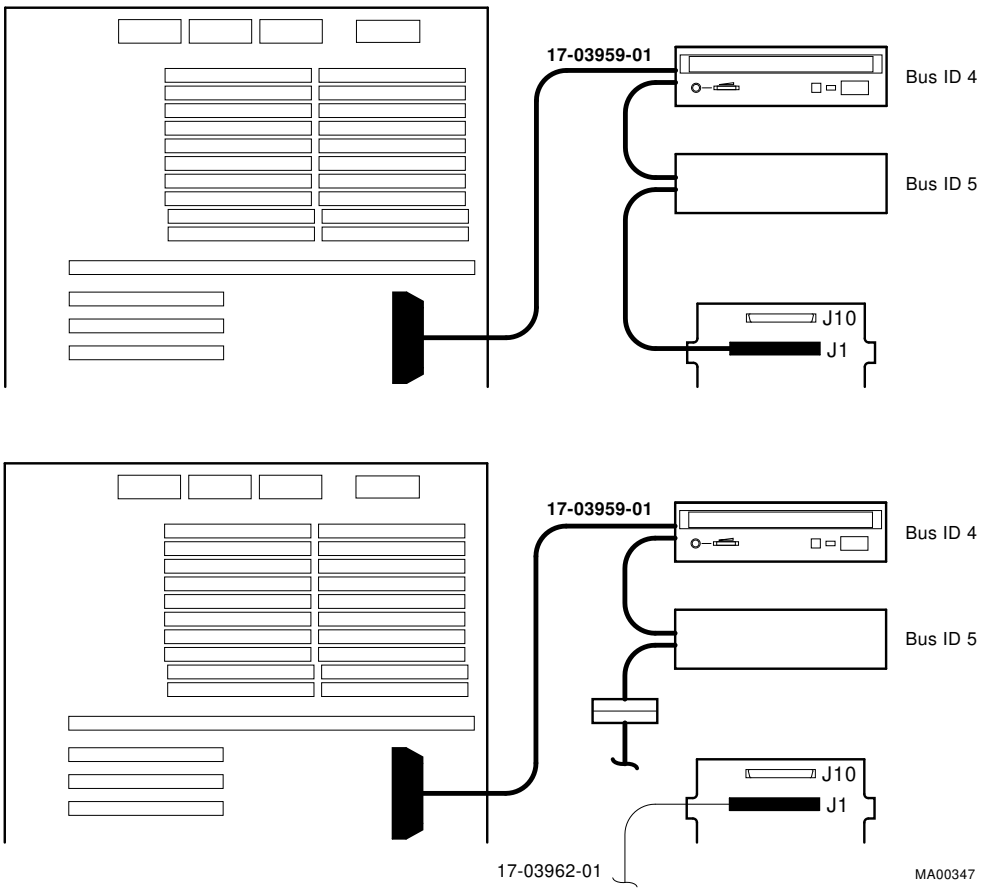

**Figure 6–17 SCSI RAID Internal Cable (50-Pin) (Single-Channel)**

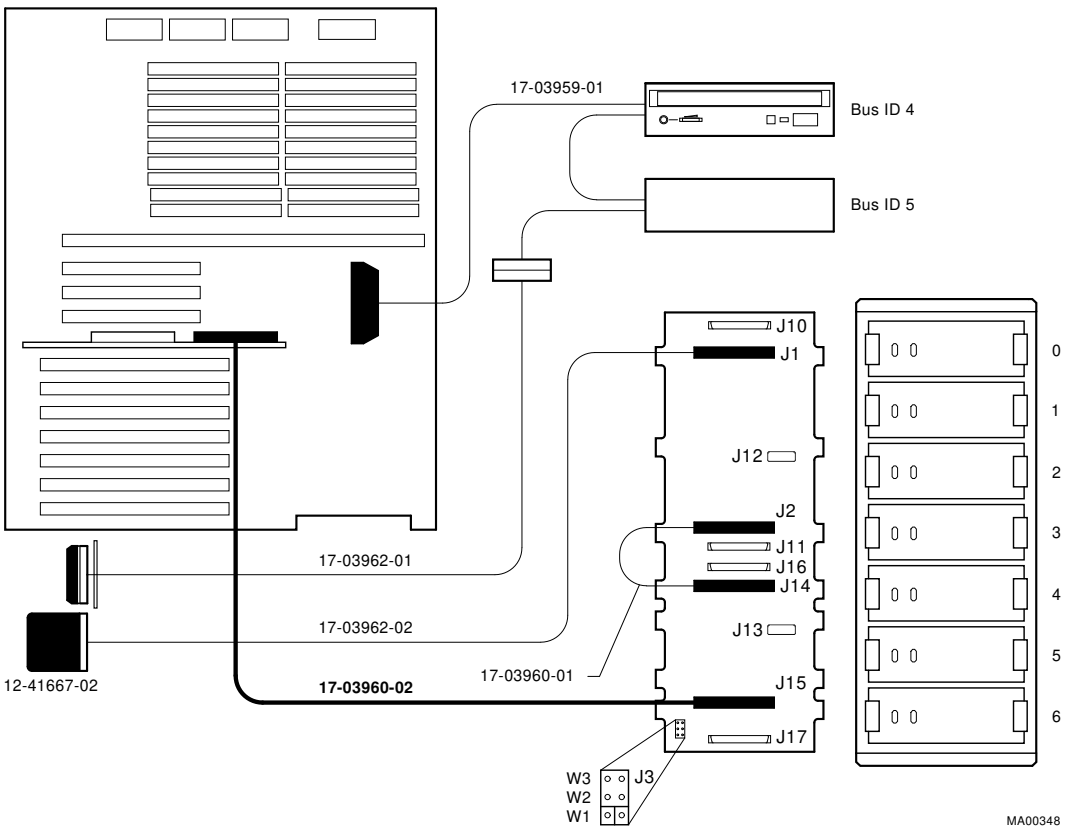

**Figure 6–18 SCSI RAID Internal Cable (50-Pin) (Dual-Channel)**

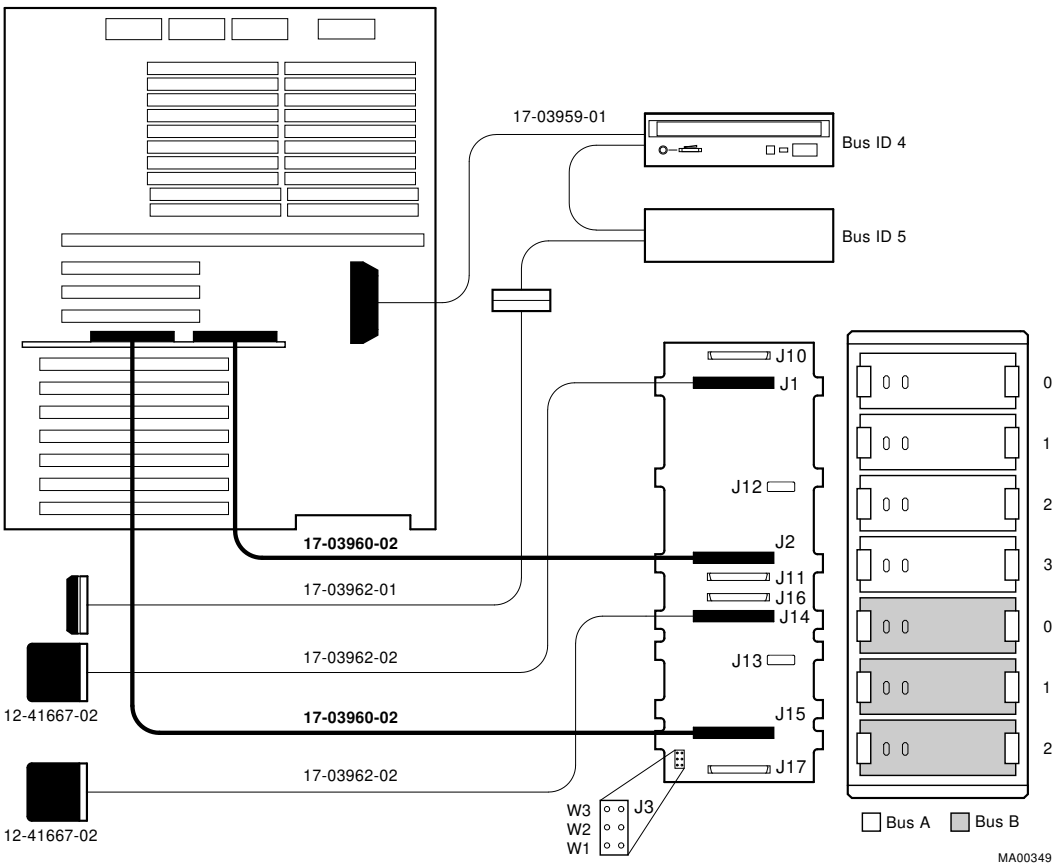

## 6.2.2 CPU Daughter Board

**Figure 6–19 Removing CPU Daughter Board**

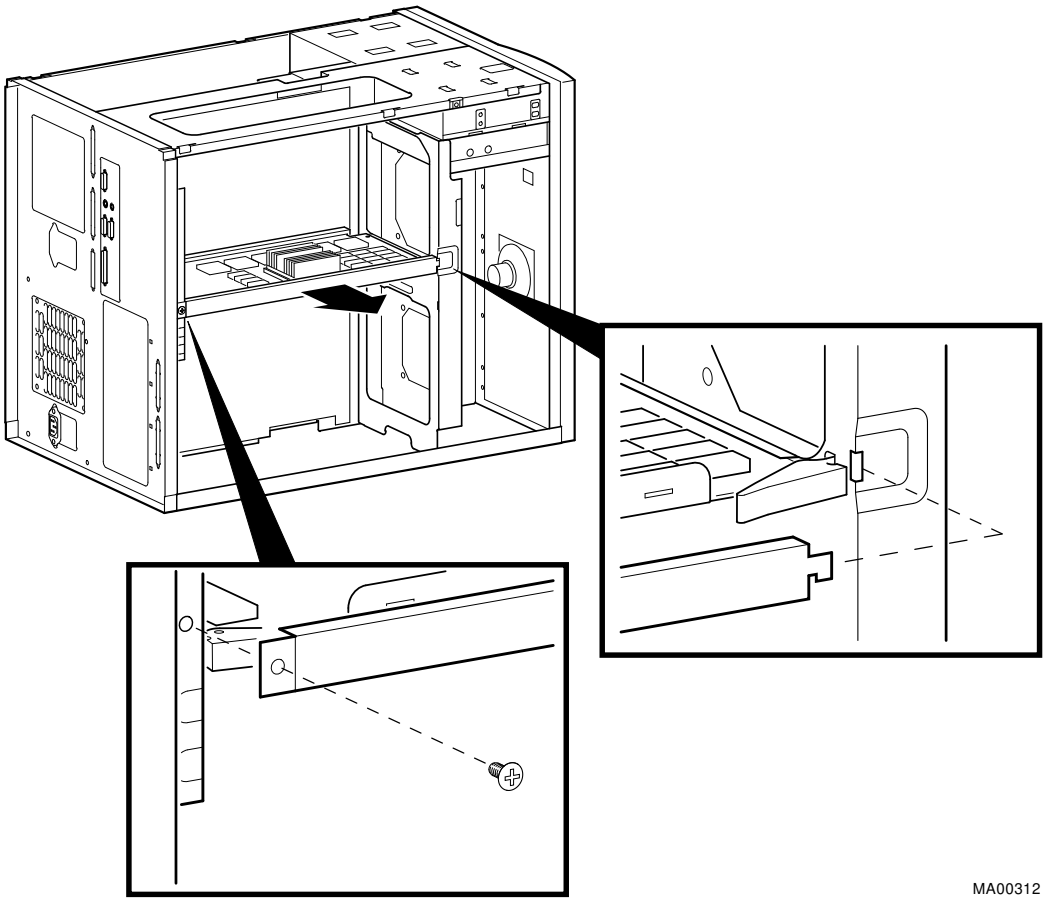


**Warning:** CPU and memory modules have parts that operate at high temperatures. Wait 2 minutes after power is removed before handling these modules.

### 6.2.3 Fans

**STEP 1: REMOVE THE CPU DAUGHTER BOARD AND ANY OTHER OPTIONS BLOCKING ACCESS TO THE FAN SCREWS.**

See Figure 6–19 for removing the CPU daughter board.

**STEP 2: DISCONNECT THE FAN CABLE FROM THE MOTHERBOARD AND REMOVE FAN.**

**Figure 6–20 Removing Fans**

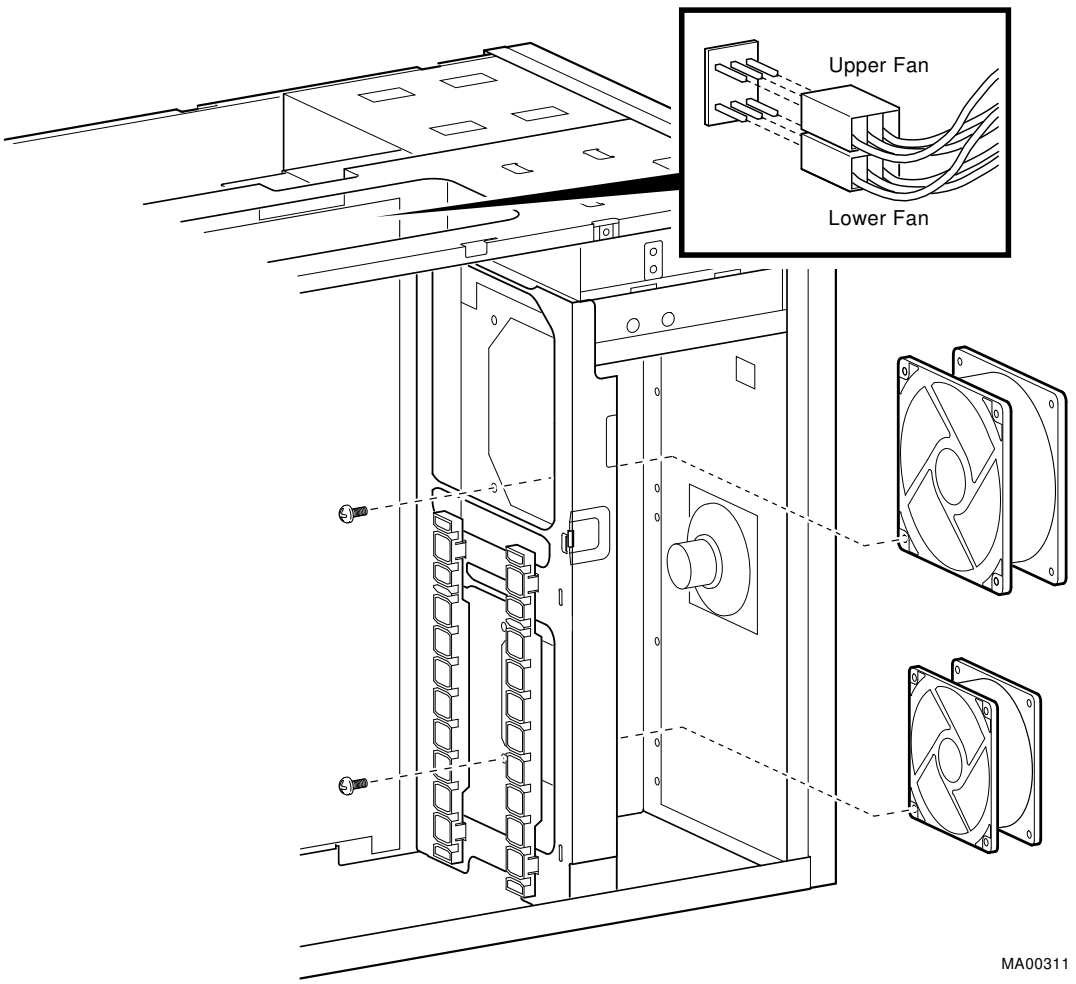

### 6.2.4 StorageWorks Drive

**Note**

If the StorageWorks drives are plugged into an SWXCR-xx controller, you can ''hot swap'' drives; that is, you can add or replace drives without first shutting down the operating system or powering down the server hardware. For more information, see *StorageWorks RAID Array 200 Subsystem Family Installation and Configuration Guide, EK-SWRA2-IG.*

If the StorageWorks drives are not plugged into an SWXCR-xx controller, you will need to shut down the operating system before swapping a drive. However, you will not need to power down the server before installing the drives.

**Figure 6–21 Removing StorageWorks Drive**

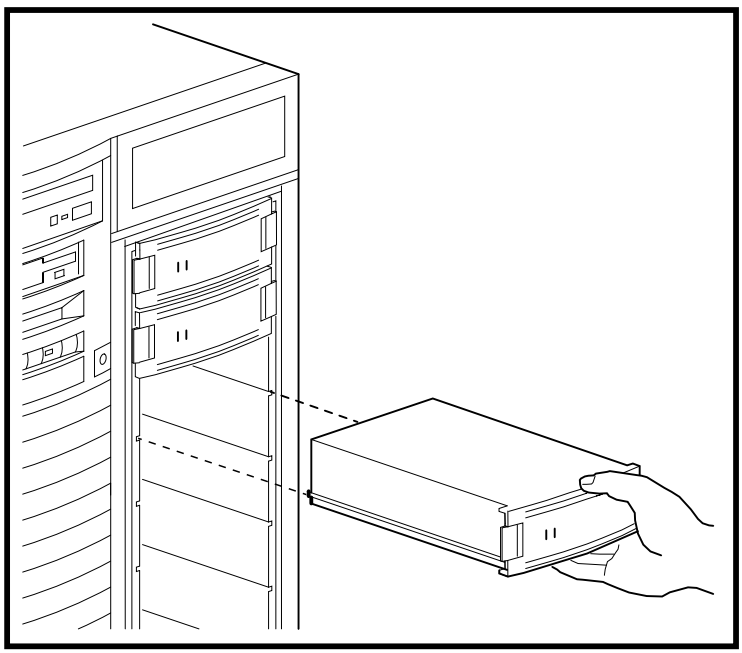

MA00322

## 6.2.5 Internal StorageWorks Backplane

**STEP 1: REMOVE POWER SUPPLIES.**

**Figure 6–22 Removing Power Supply**

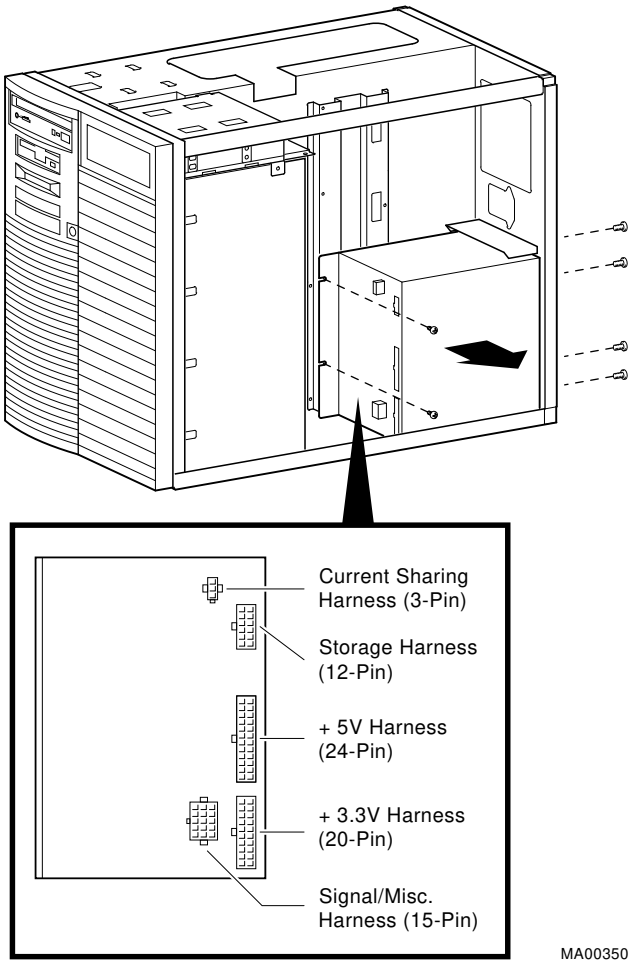

**STEP 2: REMOVE INTERNAL STORAGEWORKS BACKPLANE.**

**Figure 6–23 Removing Internal StorageWorks Backplane**

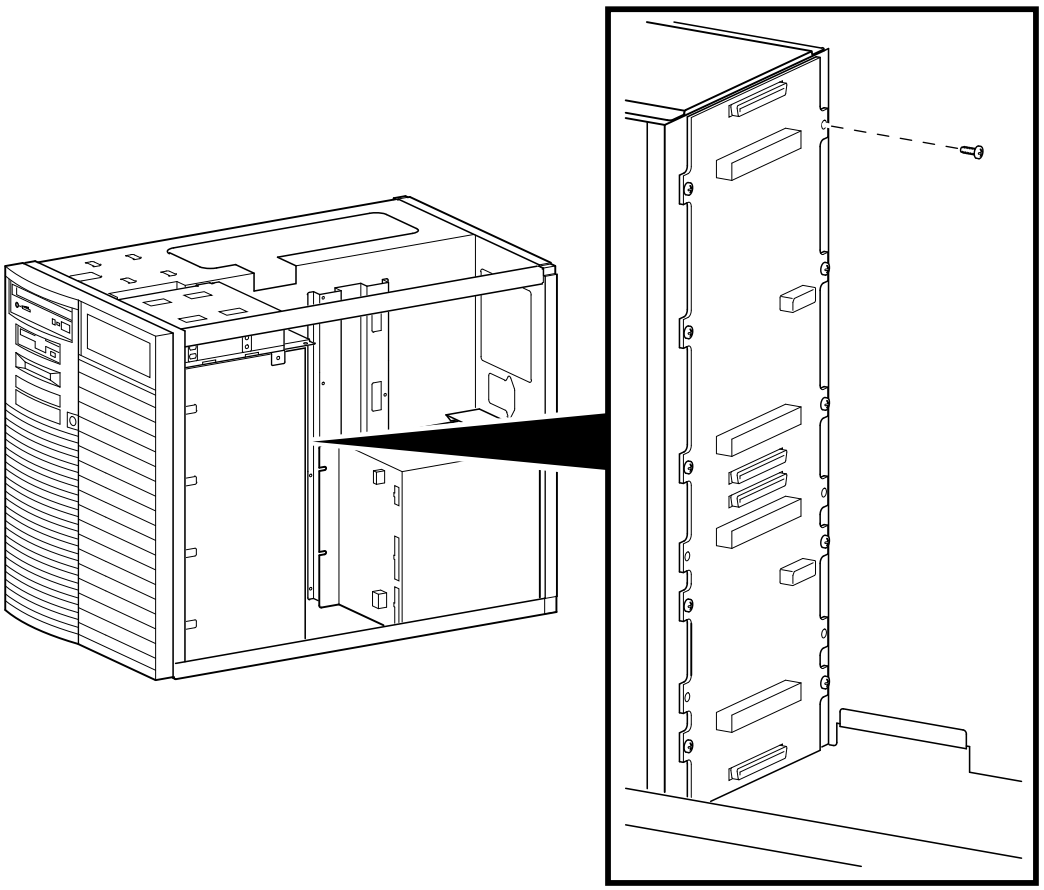

MA00323

### 6.2.6 Memory Modules

The positions of the failing single-inline memory modules (SIMMs) are reported by SROM power-up scripts (Section 2.1.1).

**Note**

- Bank 0 must contain a memory option (5 SIMMs–0, 1, 2, 3, and 1 ECC SIMM).
- A memory option consists of five SIMMs (0, 1, 2, 3 and 1 ECC SIMM for the bank).
- All SIMMs within a bank must be of the same capacity.

**STEP 1: RECORD THE POSITION OF THE FAILING SIMMS.**
**STEP 2: LOCATE THE FAILING SIMM ON THE MOTHERBOARD.**

**Figure 6–24 Memory Layout on Motherboard**

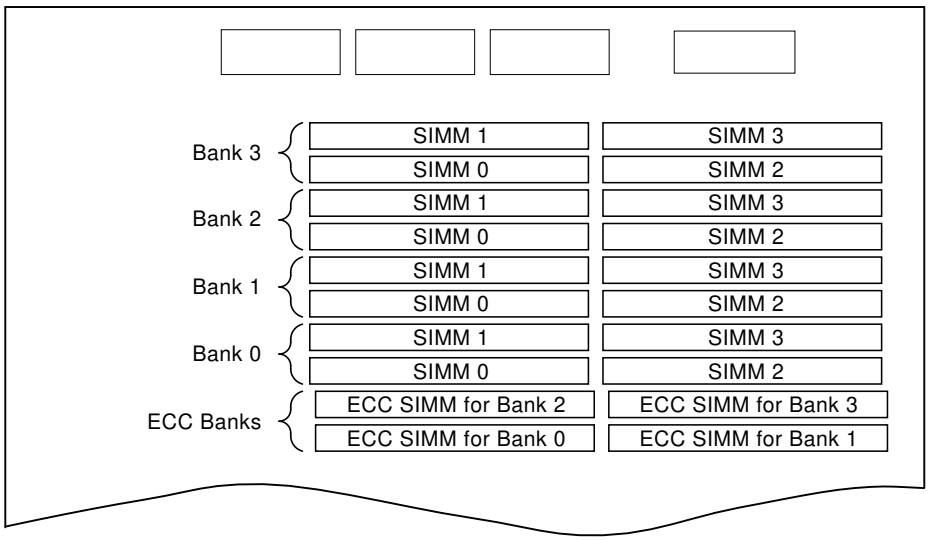


**STEP 3: REPLACE THE FAILING SIMMS.**

**Warning:** Memory and CPU modules have parts that operate at high temperatures. Wait 2 minutes after power is removed before handling these modules.

**Caution**

Do not use any metallic tools or implements including pencils to release SIMM latches. Static discharge can damage the SIMMs.

**Figure 6–25 Removing SIMMs from Motherboard**

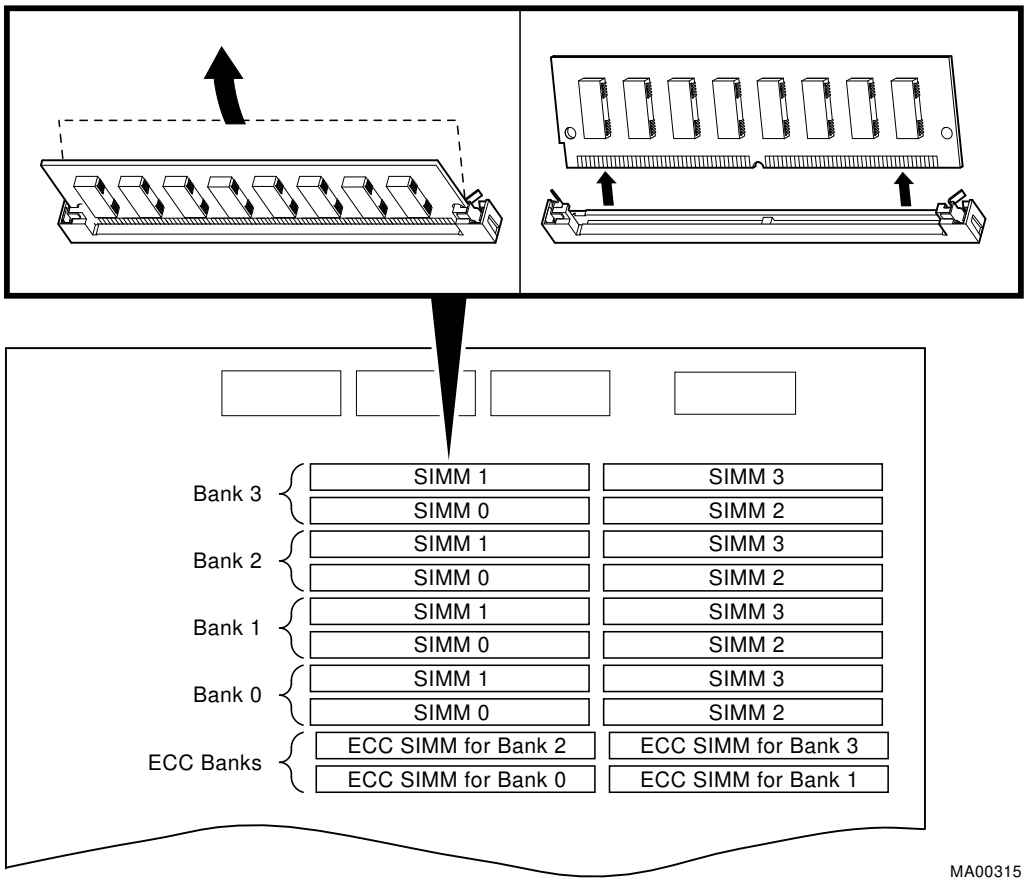

**Note**

SIMMs can only be removed and installed in successive order. For example; to remove a SIMM at bank 0, SIMM 1, SIMMs 0 and 1 for banks 3, 2, and 1 must first be removed.

**Figure 6–26 Installing SIMMs on Motherboard**

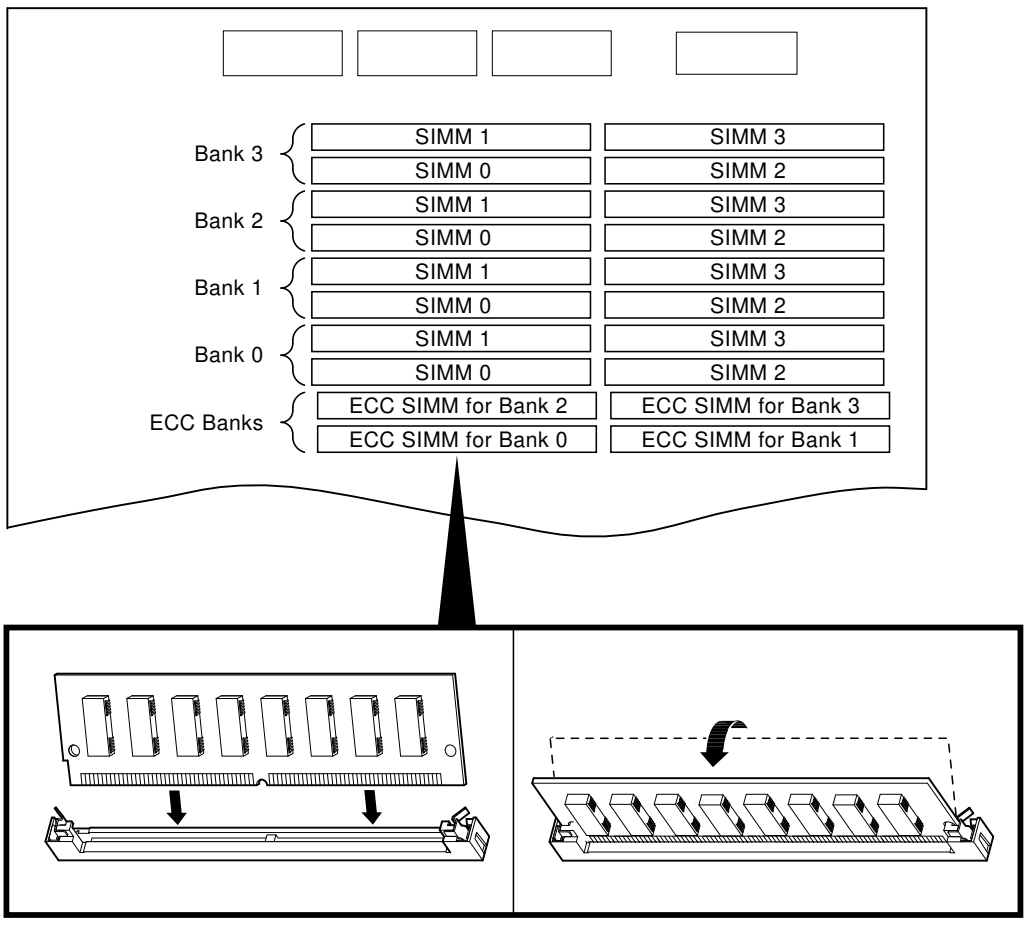

**Note**

When installing SIMMs, make sure that the SIMMs are fully seated. The two latches on each SIMM connector should lock around the edges of the SIMMs.

## 6.2.7 Interlock Switch

**Figure 6–27 Removing the Interlock Safety Switch**

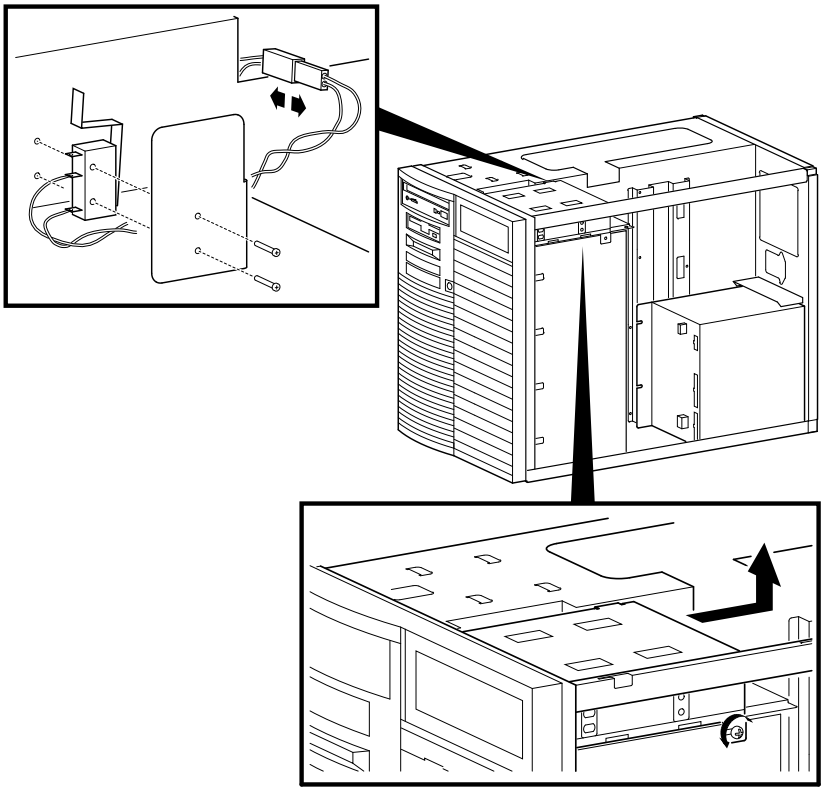

MA00309

### 6.2.8 Motherboard

**STEP 1: RECORD THE POSITION OF EISA AND PCI OPTIONS.**
**STEP 2: REMOVE EISA AND PCI OPTIONS.**
**STEP 3: REMOVE CPU DAUGHTER BOARD.**

**Figure 6–28 Removing EISA and PCI Options**

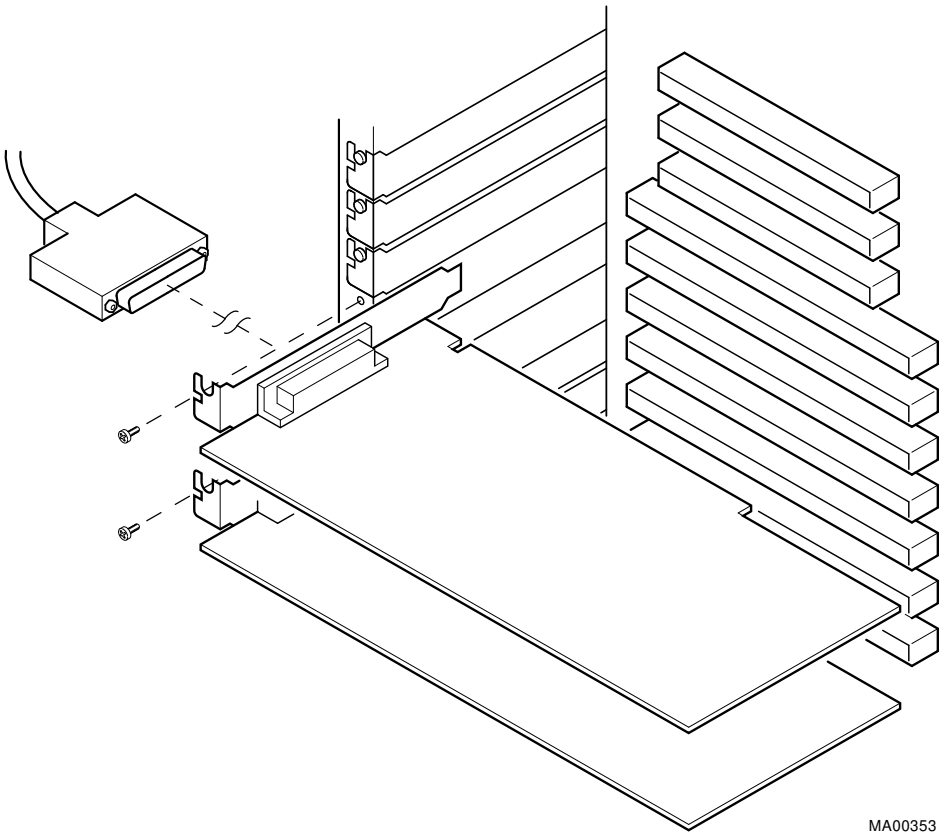

**Figure 6–29 Removing CPU Daughter Board**

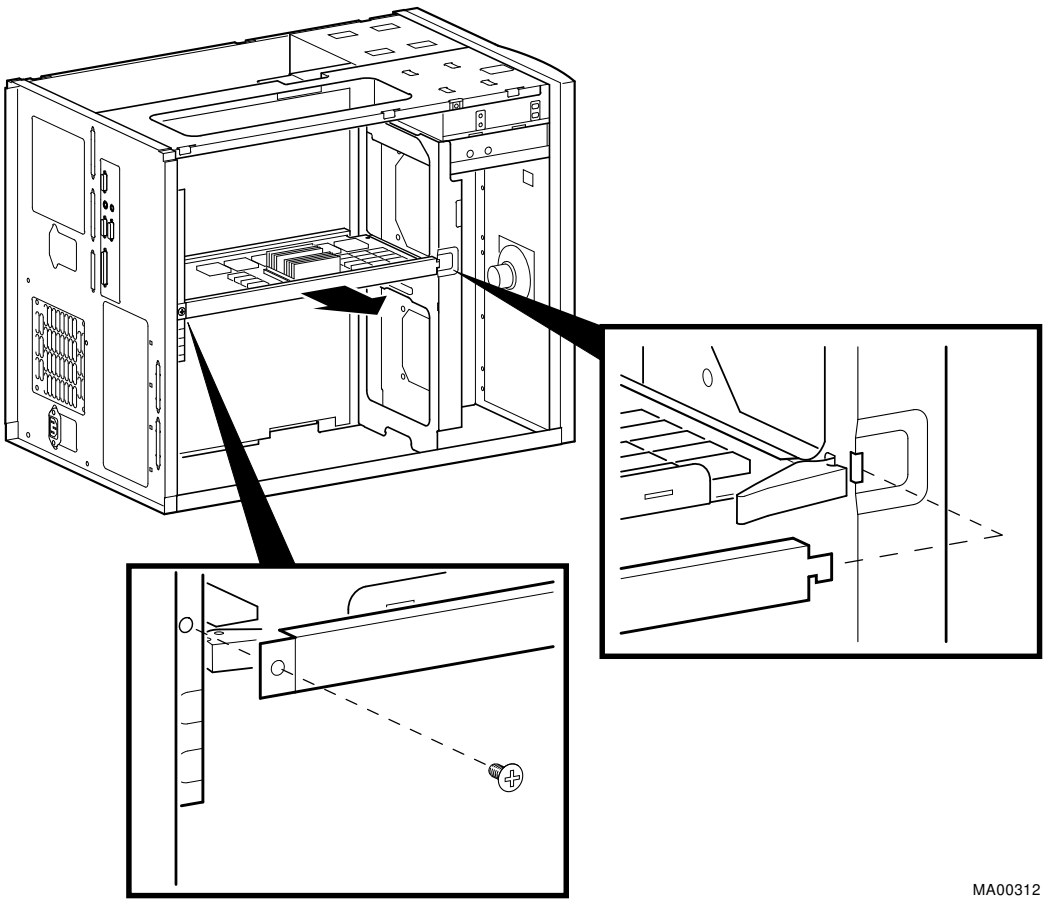


**Warning:** CPU and memory modules have parts that operate at high temperatures. Wait 2 minutes after power is removed before handling these modules.

**STEP 4: DETACH MOTHERBOARD CABLES, REMOVE SCREWS AND MOTHERBOARD.**

**Caution**

When replacing the system bus motherboard install the screws in the order indicated.

**Figure 6–30 Removing Motherboard**

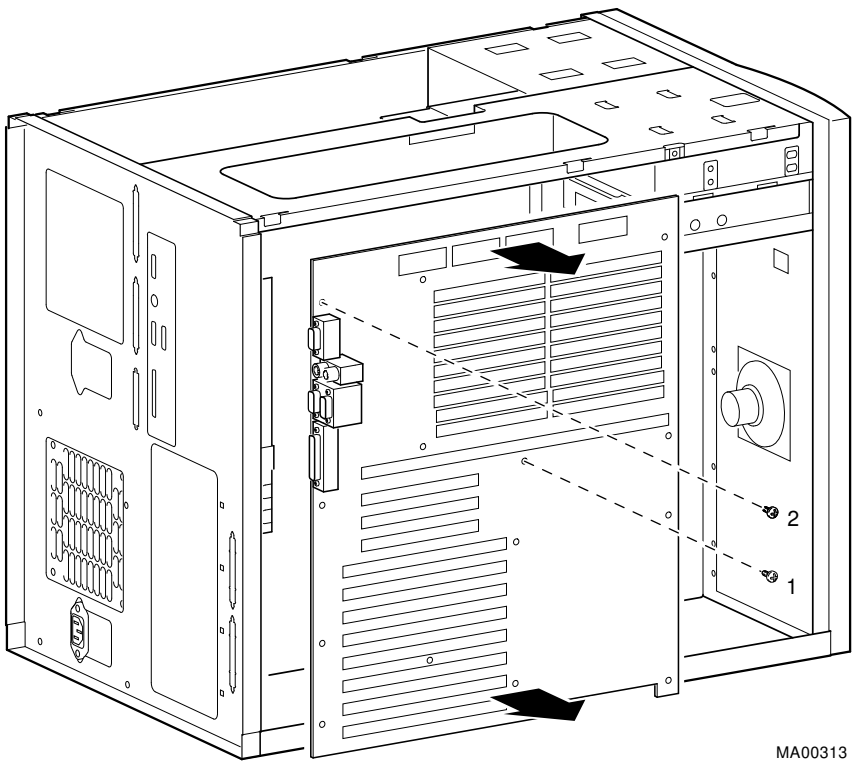

### STEP 5: MOVE THE NVRAM CHIP (E14) AND NVRAM TOY CHIP (E78) TO THE NEW MOTHERBOARD.

Move the socketed NVRAM chip (position E14) and NVRAM TOY chip (E78) to the replacement motherboard and set the jumpers to match previous settings.

**Figure 6–31 Motherboard Layout**

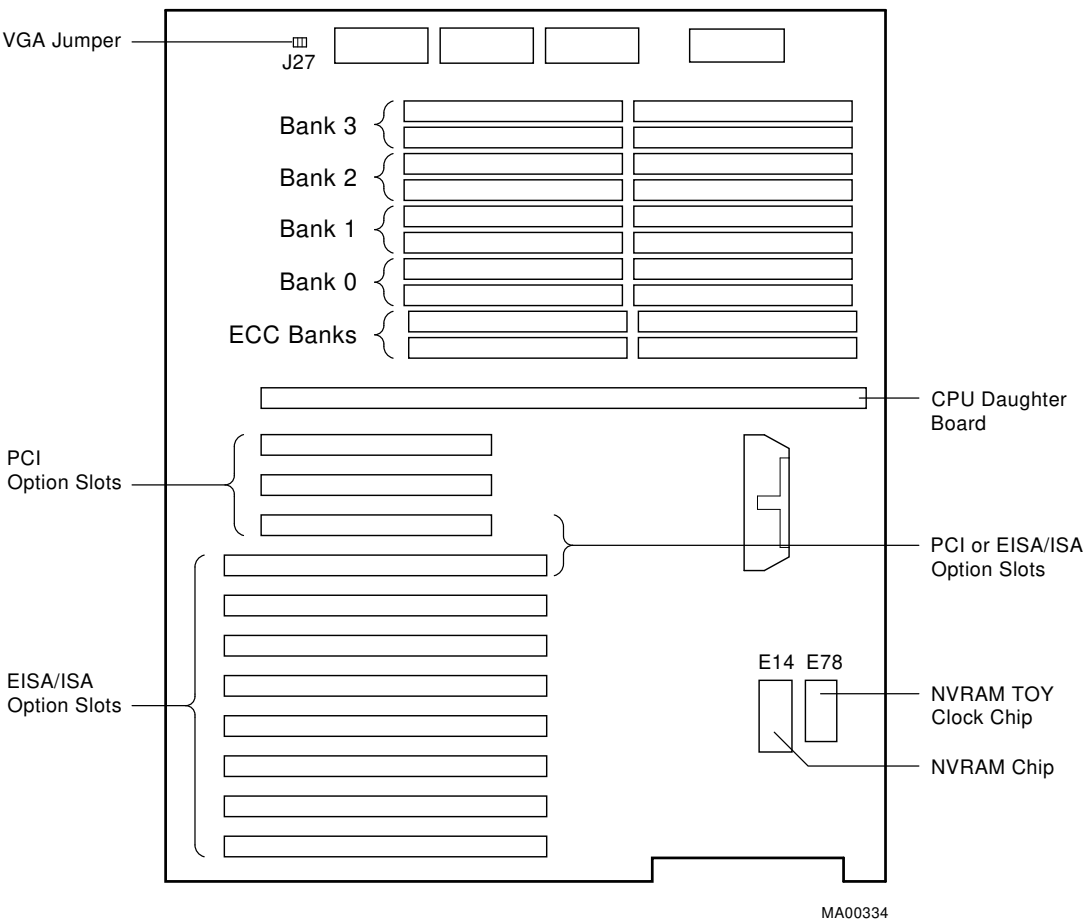

## 6.2.9 NVRAM Chip (E14) and NVRAM TOY Clock Chip (E78)

See Figure 6–31 for the motherboard layout.

## 6.2.10 OCP Module

**STEP 1: REMOVE FRONT DOOR.**
**STEP 2: REMOVE FRONT PANEL.**
**STEP 3: REMOVE OCP MODULE.**

**Figure 6–32 Removing Front Door**

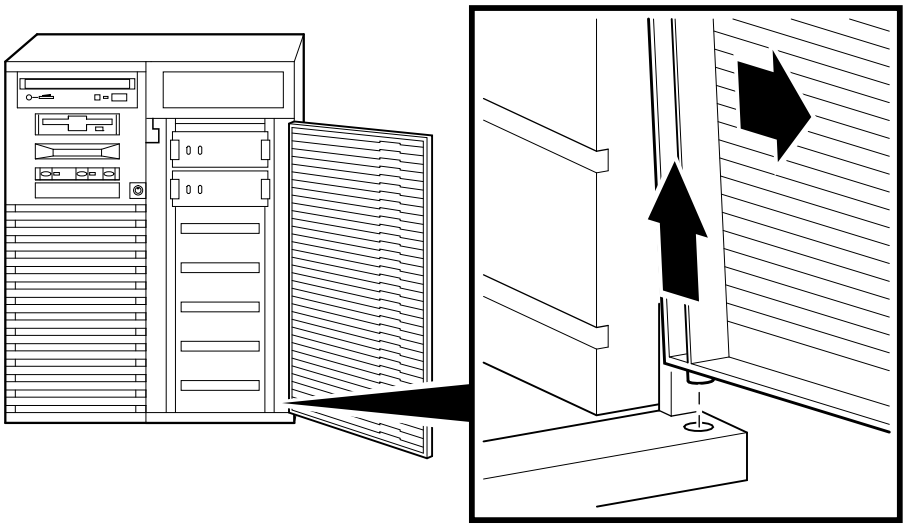

MA00306

**Figure 6–33 Removing Front Panel**

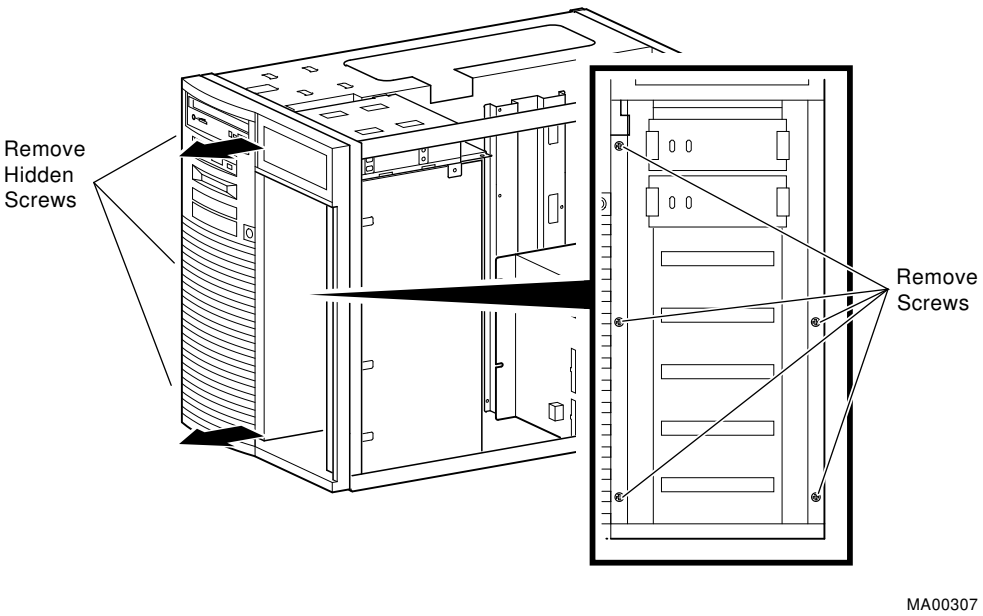

**Figure 6–34 Removing the OCP Module**

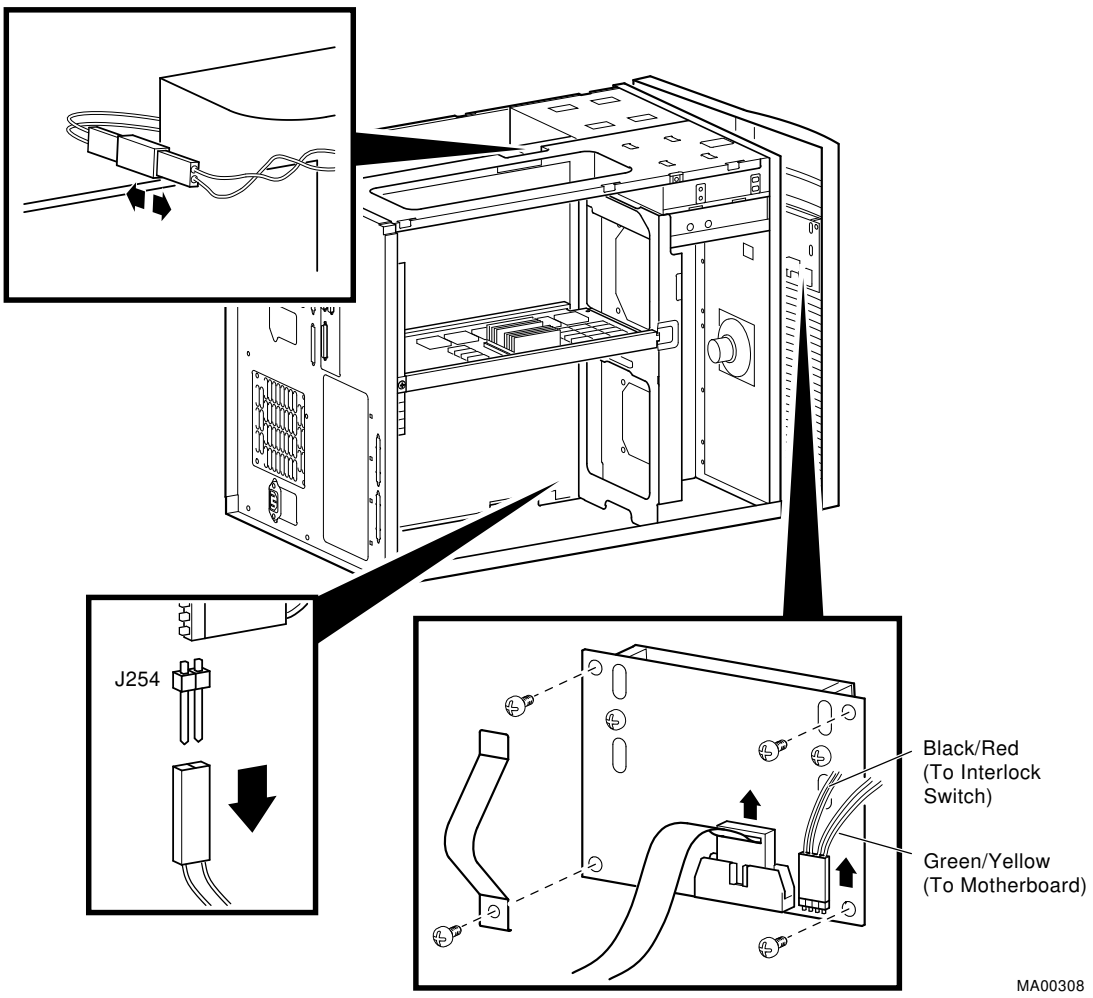

## 6.2.11 Power Supply

**STEP 1: DISCONNECT POWER SUPPLY CABLES.**
**STEP 2: REMOVE POWER SUPPLY.**

**Figure 6–35 Removing Power Supply**

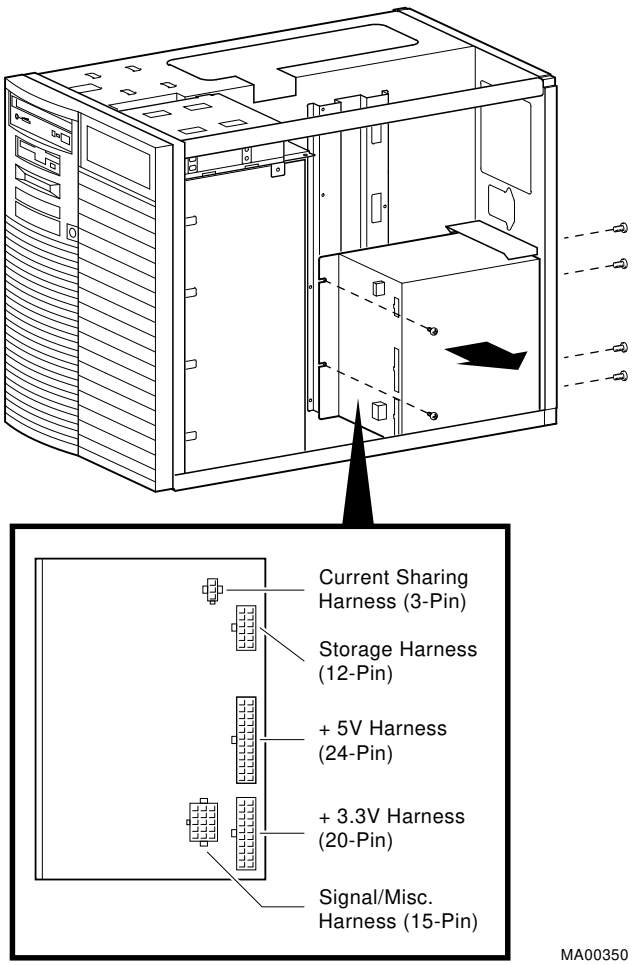


**Warning:** Hazardous voltages are contained within. Do not attempt to service. Return to factory for service.

## 6.2.12 Speaker

**Figure 6–36 Removing Speaker**

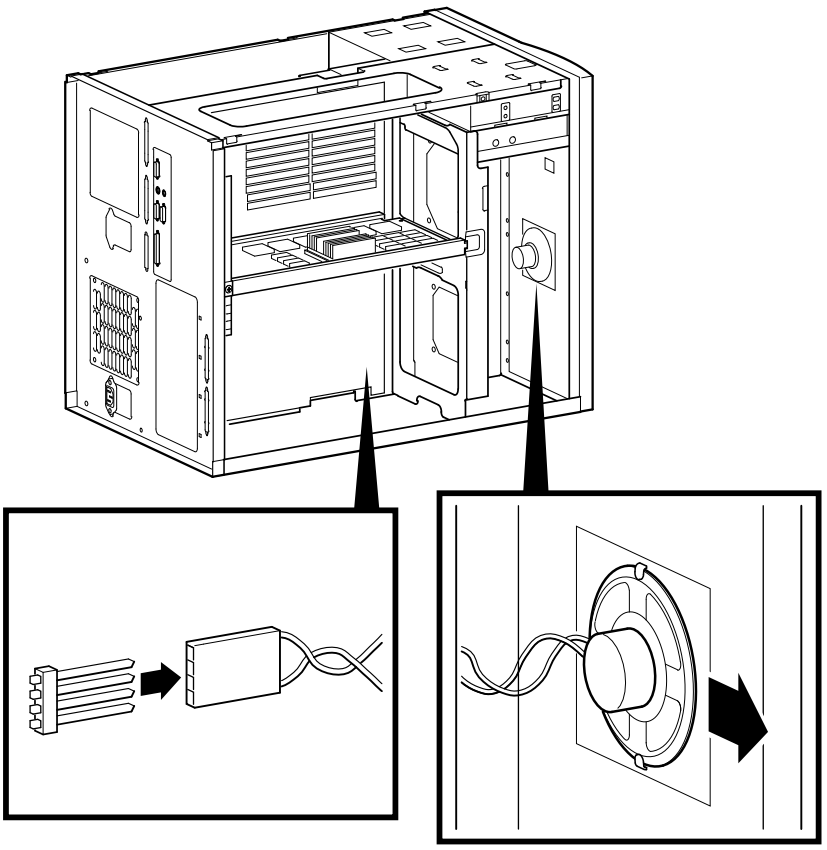

MA00310

## 6.2.13 Removable Media

**Figure 6–37 Removing a CD–ROM Drive**

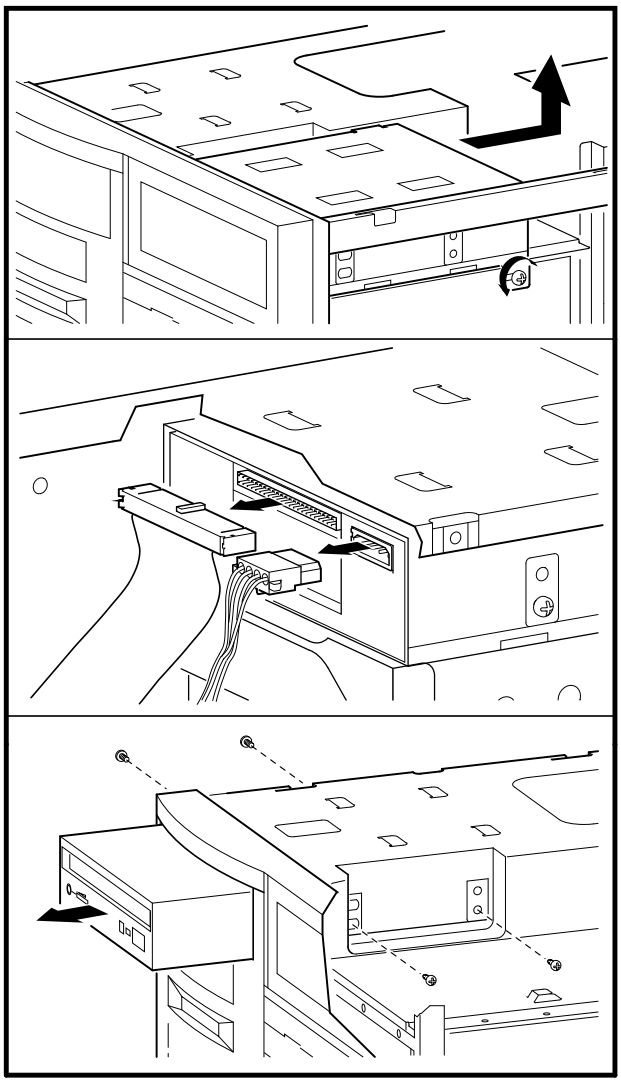

MA00324

**Figure 6–38 Removing a Tape Drive**

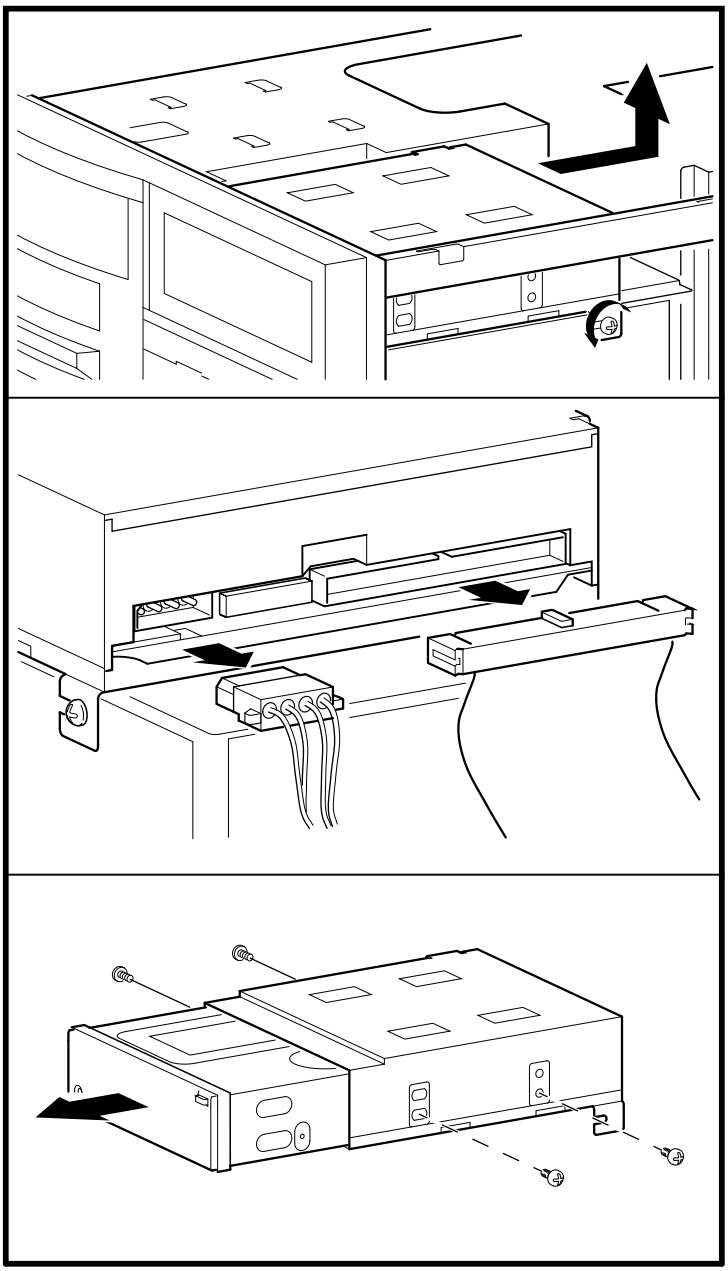

MA00325

**Figure 6–39 Removing a Floppy Drive**

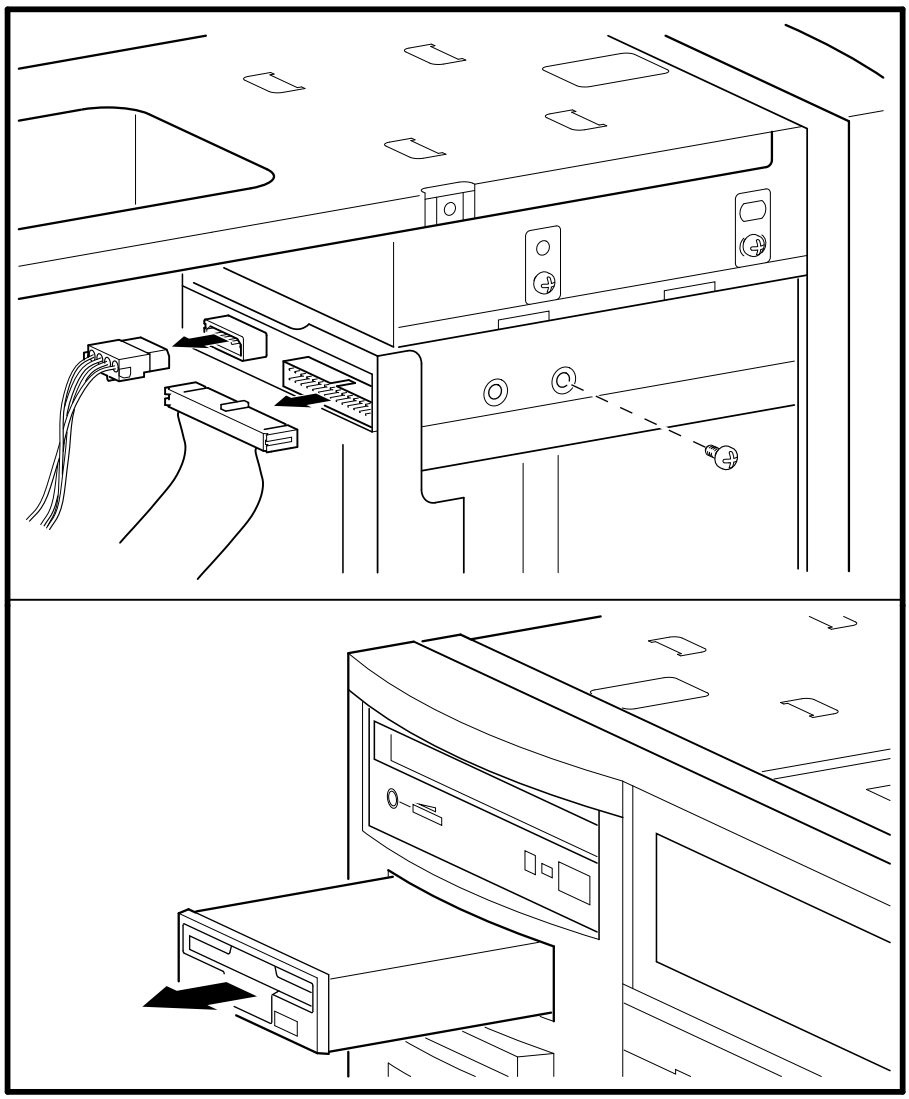

MA00326

# A

# Default Jumper Settings

This appendix provides the location and default setting for all jumpers in AlphaServer 1000 systems:

- Section A.1 provides location and default settings for jumpers located on the motherboard.
- Section A.2 provides the location and supported settings for jumpers J3 and J4 on the CPU daughter board.
- Section A.3 provides the location and default setting for the J1 jumper on the CPU daughter board.

## A.1 Motherboard Jumpers

Figure A–1 shows the location and default settings for jumpers located on the motherboard.

**Figure A–1 Motherboard Jumpers (Default Settings)**

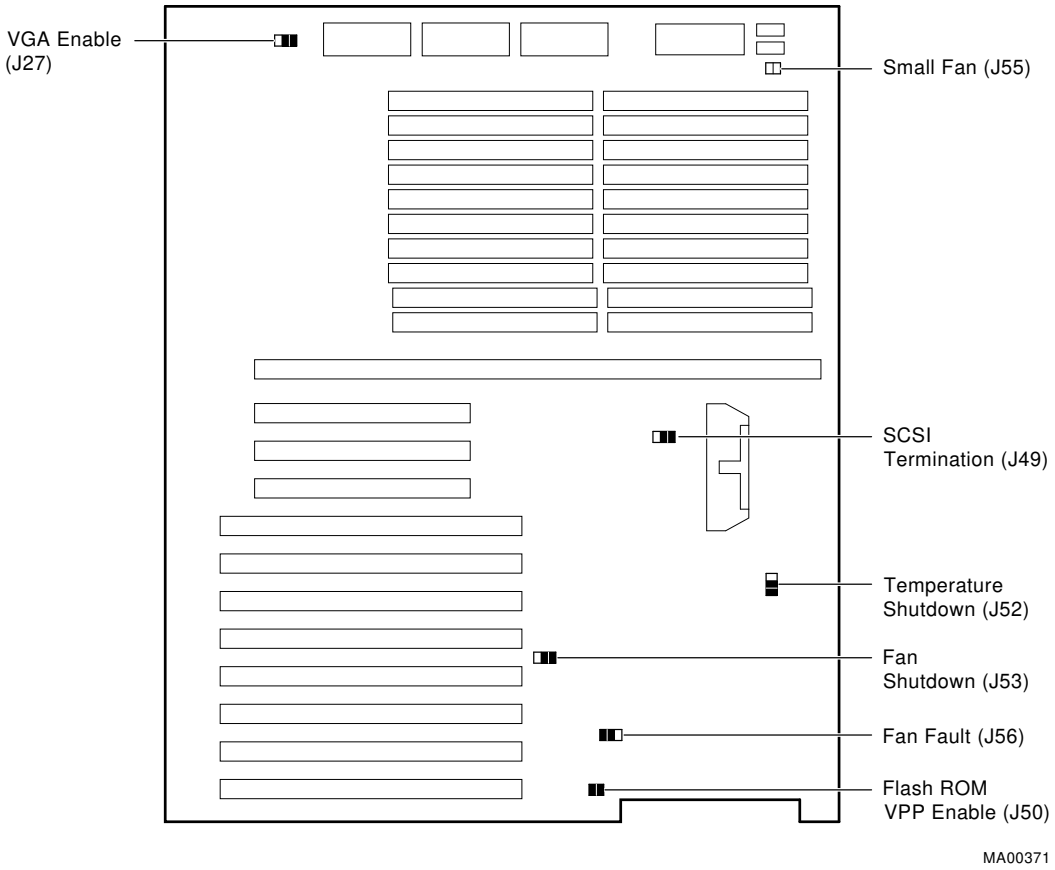

| Jumper | Name | Description | Default Setting |
|---|---|---|---|
| J27 | VGA Enable | When enabled (as shown in Figure A–1), the on-board VGA logic is activated. | Enabled for on-board VGA; Disabled if an EISA- or PCI-based VGA option is installed. |
| J49 | SCSI Termination | Allows the internal SCSI terminator to be disabled. | Enabled (as shown in Figure A–1). |
| J50 | Flash ROM VPP Enable | Permits the 12V voltage needed to update the Flash ROMs. | Jumper installed. |
| J52 | Temperature Shutdown | Allows the temperature sensor to shut down the system in an over temperature condition. | Currently ships enabled (as shown in Figure A–1). |
| J53 | Fan Shutdown | Allows the software to shut down the system if a fan fails. | Enabled (as shown in Figure A–1). |
| J55 | Small Fan | Allows the small fan to be disabled to accommodate the wide-tower enclosure. | This jumper is not installed on AlphaServer 1000 systems. |
| J56 | Fan Fault | When enabled, the hardware forces the system to shut down if a fan fails. When disabled, the firmware generates a machine check; the system crashes and shuts down if a fan fails. | Enabled (as shown in Figure A–1). |

## A.2 CPU Daughter Board (J3 and J4) Supported Settings

Figure A–2 shows the supported AlphaServer 1000 4/200 settings for the J3 and J4 jumpers on the CPU daughter board. These jumpers affect clock speed and other critical system settings.

Figure A–3 shows the supported AlphaServer 1000 4/233 settings for the J3 and J4 jumpers on the CPU daughter board. These jumpers affect clock speed and other critical system settings.

**Figure A–2 AlphaServer 1000 4/200 CPU Daughter Board (Jumpers J3 and J4)**

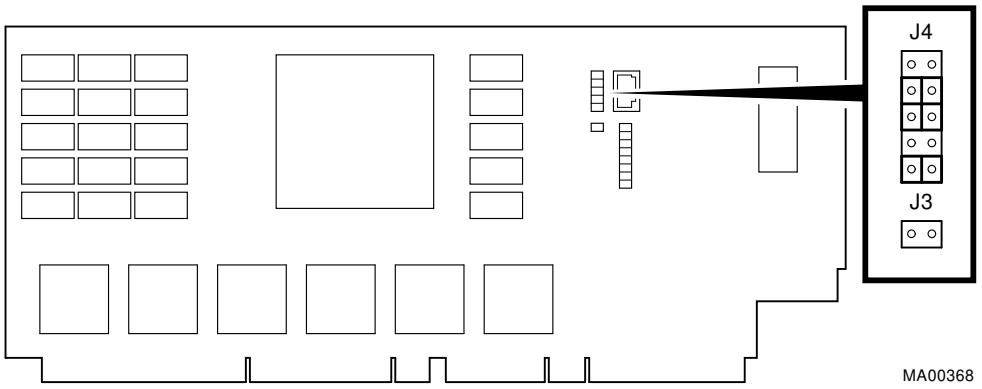


Supported settings:

- J4 Jumper:

  Off
  On
  On
  Off
  On

- J3 Jumper:

  Off

**Figure A–3 AlphaServer 1000 4/233 CPU Daughter Board (Jumpers J3 and J4)**

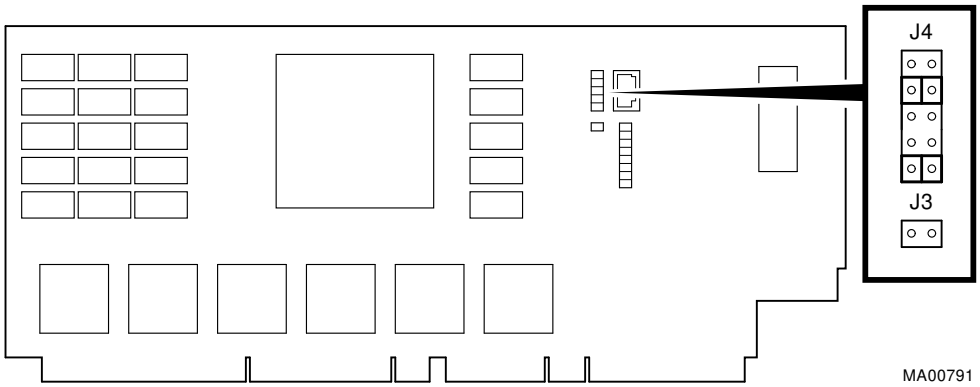


Supported settings:

- J4 Jumper:

  Off
  On
  Off
  Off
  On

- J3 Jumper:

  Off

## A.3 CPU Daughter Board (J1 Jumper)

Figure A–4 shows the default setting for the J1 jumper on the CPU daughter board. For information on SROM tests and the fail-safe loader, which are activated through the J1 jumper, refer to Chapter 2.

**Figure A–4 CPU Daughter Board (J1 Jumper)**

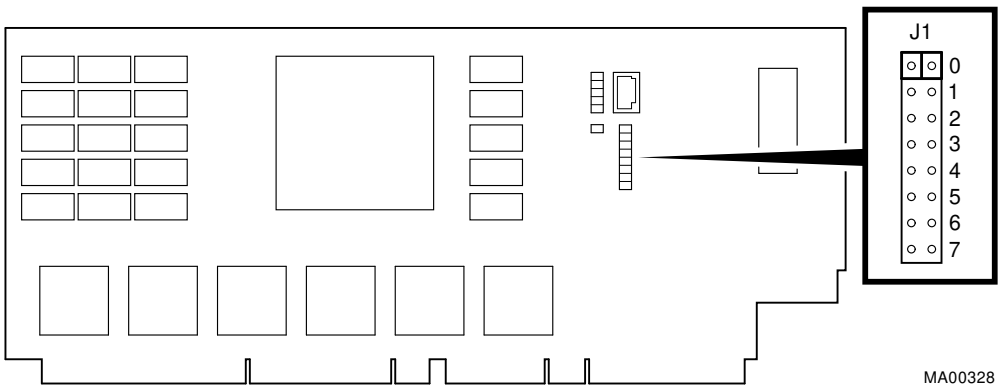


| Bank | Jumper Setting |
|---|---|
| 0 | Standard boot setting (default) |
| 1 | Mini-console setting: Internal use only |
| 2 | SROM CacheTest: backup cache test |
| 3 | SROM BCacheTest: backup cache and memory test |
| 4 | SROM memTest: memory test with backup and data cache disabled |
| 5 | SROM memTestCacheOn: memory test with backup and data cache enabled |
| 6 | SROM BCache Tag Test: backup cache tag test |
| 7 | Fail-Safe Loader setting: selects fail-safe loader firmware |

# Glossary

### 10BASE-T Ethernet network

IEEE standard 802.3-compliant Ethernet products used for local distribution of data. These networking products characteristically use twisted-pair cable.

### ARC

User interface to the console firmware for operating systems that require firmware compliance with the *Windows NT Portable Boot Loader Specification*. ARC stands for Advanced RISC Computing.

### AUI Ethernet network

Attachment unit interface. An IEEE standard 802.3-compliant Ethernet network connected with standard Ethernet cable.

### autoboot

A system boot initiated automatically by software when the system is powered up or reset.

### availability

The amount of scheduled time that a computing system provides application service during the year. Availability is typically measured as either a percentage of uptime per year or as system unavailability, the number of hours or minutes of downtime per year.

### BA350 storage shelf

A StorageWorks modular storage shelf used for disk storage in some AlphaServer systems.

### backplane

The main board or panel that connects all of the modules in a computer system.

### backup cache

A second, very fast cache memory that is closely coupled with the processor.

### bandwidth

The rate of data transfer in a bus or I/O channel. The rate is expressed as the amount of data that can be transferred in a given time, for example megabytes per second.

### battery backup unit

A battery unit that provides power to the entire system enclosure (or to an expander enclosure) in the event of a power failure. Another term for uninterruptible power supply (UPS).

### boot

Short for bootstrap. To load an operating system into memory.

### boot device

The device from which the system bootstrap software is acquired.

### boot flags

A flag is a system parameter set by the user. Boot flags contain information that is read and used by the bootstrap software during a system bootstrap procedure.

### boot server

A computer system that provides boot services to remote devices such as network routers.

### bootstrap

The process of loading an operating system into memory.

### bugcheck

A software condition, usually the response to software's detection of an ''internal inconsistency,'' which results in the execution of the system bugcheck code.

### bus

A collection of many transmission lines or wires. The bus interconnects computer system components, providing a communications path for addresses, data, and control information or external terminals and systems in a communications network.

### bystander

A system bus node (CPU or memory) that is not addressed by a current system bus commander.

### byte

A group of eight contiguous bits starting on an addressable byte boundary. The bits are numbered right to left, 0 through 7.

### cache memory

A small, high-speed memory placed between slower main memory and the processor. A cache increases effective memory transfer rates and processor speed. Cache contains copies of data recently used by the processor and fetches several bytes of data from memory in anticipation that the processor will access the next sequential series of bytes.

### card cage

A mechanical assembly in the shape of a frame that holds modules against the system and storage backplanes.

### carrier

The individual container for all StorageWorks devices, power supplies, and so forth. In some cases because of small form factors, more than one device can be mounted in a carrier. Carriers can be inserted in modular shelves. Modular shelves can be mounted in modular enclosures.

### CD–ROM

A read-only compact disc. The optical removable media used in a compact disc reader.

### central processing unit (CPU)

The unit of the computer that is responsible for interpreting and executing instructions.

### client-server computing

An approach to computing whereby a computer—the ‘‘server’’—provides a set of services across a network to a group of computers requesting those services—the ‘‘clients.’’

### cluster

A group of networked computers that communicate over a common interface. The systems in the cluster share resources, and software programs work in close cooperation.

### cold bootstrap

A bootstrap operation following a power-up or system initialization (restart). On Alpha based systems, the console loads PALcode, sizes memory, and initializes environment variables.

### commander

In a particular bus transaction, a CPU or standard I/O that initiates the transaction.

### command line interface

One of two modes of operation in the AlphaServer operator interface. The command line interface supports the OpenVMS and DEC OSF/1 operating systems. The interface allows you to configure and test the system, examine and alter the system state, and boot the operating system.

### console mode

The state in which the system and the console terminal operate under the control of the console program.

### console program

The code that executes during console mode.

### console subsystem

The subsystem that provides the user interface for a computer system when the operating system is not running.

### console terminal

The terminal connected to the console subsystem. The terminal is used to start the system and direct activities between the computer operator and the console subsystem.

### data bus

A bus used to carry data between two or more components of the system.

### data cache

A high-speed cache memory reserved for the storage of data. Abbreviated as D-cache.

### DECchip 21064 processor

The CMOS, single-chip processor based on the Alpha architecture and used on many AlphaGeneration computers.

### DEC OSF/1 Version 3.0b for AXP systems

A general-purpose operating system based on the Open Software Foundation OSF/1 2.0 technology. DEC OSF/1 V3.x runs on the range of AlphaGeneration systems, from workstations to servers.

### DEC VET

Digital DEC Verifier and Exerciser Tool. A multipurpose system diagnostic tool that performs exerciser-oriented maintenance testing.

### diagnostic program

A program that is used to find and correct problems with a computer system.

### direct-mapping cache

A cache organization in which only one address comparison is needed to locate any data in the cache, because any block of main memory data can be placed in only one possible position in the cache.

### direct memory access (DMA)

Access to memory by an I/O device that does not require processor intervention.

### DRAM

Dynamic random-access memory. Read/write memory that must be refreshed (read from or written to) periodically to maintain the storage of information.

### DSSI

Digital's proprietary data bus that uses the System Communication Architecture (SCA) protocols for direct host-to-storage communications.

### DSSI cluster

A cluster system that uses the DSSI bus as the interconnect between DSSI disks and systems.

### DUP server

Diagnostic Utility Program server. A firmware program on board DSSI devices that allows a user to set host to a specified device in order to run internal tests or modify device parameters.

### ECC

Error correction code. Code and algorithms used by logic to facilitate error detection and correction.

### EEPROM

Electrically erasable programmable read-only memory. A memory device that can be byte-erased, written to, and read from.

### EISA bus

Extended Industry Standard Architecture bus. A 32-bit industry-standard I/O bus used primarily in high-end PCs and servers.

### EISA Configuration Utility (ECU)

A feature of the EISA bus that helps you select a conflict-free system configuration and perform other system services. The ECU must be run whenever you change, add, or remove an EISA or ISA controller.

### environment variables

Global data structures that can be accessed only from console mode. The setting of these data structures determines how a system powers up, boots the operating system, and operates.

### ERF/UERF

Error Report Formatter. ERF is used to present error log information for OpenVMS. UERF is used to present error log information for DEC OSF/1.

### Ethernet

IEEE 802.3 standard local area network.

### Factory Installed Software (FIS)

Operating system software that is loaded into a system disk during manufacture. On site, the FIS is bootstrapped in the system.

### fail-safe loader (FSL)

A program that allows you to power up without initiating drivers or running power-up diagnostics. From the fail-safe loader you can perform limited console functions.

### Fast SCSI

An optional mode of SCSI-2 that allows transmission rates of up to 10 megabytes per second.

### FDDI

Fiber Distributed Data Interface. A high-speed networking technology that uses fiber optics as the transmissions medium.

### FIB

Flexible interconnect bridge. A converter that allows the expansion of the system enclosure to other DSSI devices and systems.

### field-replaceable unit

Any system component that a qualified service person is able to replace on site.

### firmware

Software code stored in hardware.

### fixed-media compartments

Compartments that house nonremovable storage media.

### Flash ROM

Flash-erasable programmable read-only memory. Flash ROMs can be bank- or bulk-erased.

### FRU

Field-replaceable unit. Any system component that a qualified service person is able to replace on site.

### full-height device

Standard form factor for 5 1/4-inch storage devices.

### half-height device

Standard form factor for storage devices that are not the height of full-height devices.

### halt

The action of transferring control of the computer system to the console program.

### hose

The interface between the card cage and the I/O subsystems.

### hot swap

The process of removing a device from the system without shutting down the operating system or powering down the hardware.

### initialization

The sequence of steps that prepare the computer system to start. Occurs after a system has been powered up.

### instruction cache

A high-speed cache memory reserved for the storage of instructions. Abbreviated as I-cache.

### interrupt request lines (IRQs)

Bus signals that connect an EISA or ISA module (for example, a disk controller) to the system so that the module can get the system's attention through an interrupt.

### ISA

Industry Standard Architecture. An 8-bit or 16-bit industry-standard I/O bus, widely used in personal computer products. The EISA bus is a superset of the ISA bus.

### LAN

Local area network. A high-speed network that supports computers that are connected over limited distances.

### latency

The amount of time it takes the system to respond to an event.

### LED

Light-emitting diode. A semiconductor device that glows when supplied with voltage. A LED is used as an indicator light.

### loopback test

Internal and external tests that are used to isolate a failure by testing segments of a particular control or data path. A subset of ROM-based diagnostics.

### machine check/interrupts

An operating system action triggered by certain system hardware-detected errors that can be fatal to system operation. Once triggered, machine-check handler software analyzes the error.

### mass storage device

An input/output device on which data is stored. Typical mass storage devices include disks, magnetic tapes, and CD–ROMs.

### MAU

Medium attachment unit. On an Ethernet LAN, a device that converts the encoded data signals from various cabling media (for example, fiber optic, coaxial, or ThinWire) to permit connection to a networking station.

### memory interleaving

The process of assigning consecutive physical memory addresses across multiple memory controllers. Improves total memory bandwidth by overlapping system bus command execution across multiple memory modules.

### menu interface

One of two modes of operation in the AlphaServer operator interface. Menu mode lets you boot and configure the Windows NT operating system by selecting choices from a simple menu. The EISA Configuration Utility is also run from the menu interface.

### modular shelves

In the StorageWorks modular subsystem, a shelf contains one or more modular carriers, generally up to a limit of seven. Modular shelves can be mounted in system enclosures, in I/O expansion enclosures, and in various StorageWorks modular enclosures.

### MOP

Maintenance Operations Protocol. A transport protocol for network bootstraps and other network operations.

### motherboard

The main circuit board of a computer. The motherboard contains the base electronics for the system (for example, base I/O, CPU, ROM, and console serial line unit) and has connectors where options (such as I/Os and memories) can be plugged in.

### multiprocessing system

A system that executes multiple tasks simultaneously.

### node

A device that has an address on, is connected to, and is able to communicate with other devices on a bus. Also, an individual computer system connected to the network that can communicate with other systems on the network.

### NVRAM

Nonvolatile random-access memory. Memory that retains its information in the absence of power.

### OCP

Operator control panel.

### open system

A system that implements sufficient open specifications for interfaces, services, and supporting formats to enable applications software to:

- Be ported across a wide range of systems with minimal changes
- Interoperate with other applications on local and remote systems
- Interact with users in a style that facilitates user portability

### OpenVMS AXP operating system

A general-purpose multiuser operating system that supports AlphaGeneration computers in both production and development environments. OpenVMS AXP software supports industry standards, facilitating application portability and interoperability. OpenVMS AXP provides symmetric multiprocessing (SMP) support for Alpha multiprocessing systems.

### operating system mode

The state in which the system console terminal is under the control of the operating system. Also called program mode.

### operator control panel

The panel located on the front of the system, which contains the power-up /diagnostic display, DC On/Off button, Halt button, and Reset button.

### PALcode

Alpha Privileged Architecture Library code, written to support Alpha processors. PALcode implements architecturally defined behavior.

### PCI

Peripheral Component Interconnect. An industry-standard expansion I/O bus that is the preferred bus for high-performance I/O options. Available in a 32-bit and a 64-bit version.

### portability

The degree to which a software application can be easily moved from one computing environment to another.

### porting

Adapting a given body of code so that it will provide equivalent functions in a computing environment that differs from the original implementation environment.

### power-down

The sequence of steps that stops the flow of electricity to a system or its components.

### power-up

The sequence of events that starts the flow of electrical current to a system or its components.

### primary cache

The cache memory that is the fastest and closest to the processor.

### processor module

Module that contains the CPU chip.

### program mode

The state in which the system console terminal is under the control of a program other than the console program.

### RAID

Redundant array of inexpensive disks. A technique that organizes disk data to improve performance and reliability. RAID has three attributes:

- It is a set of physical disks viewed by the user as a single logical device.
- The user's data is distributed across the physical set of drives in a defined manner.
- Redundant disk capacity is added so that the user's data can be recovered even if a drive fails.

### redundant

Describes duplicate or extra computing components that protect a computing system from failure.

### reliability

The probability a device or system will not fail to perform its intended functions during a specified time.

### responder

In any particular bus transaction, memory, CPU, or I/O that accepts or supplies data in response to a command/address from the system bus commander.

### RISC

Reduced instruction set computer. A processor with an instruction set that is reduced in complexity.

### ROM-based diagnostics

Diagnostic programs resident in read-only memory.

### script

A data structure that defines a group of commands to be executed. Similar to a VMS command file.

### SCSI

Small Computer System Interface. An ANSI-standard interface for connecting disks and other peripheral devices to computer systems. Some devices are supported under the SCSI-1 specification; others are supported under the SCSI-2 specification.

### self-test

A test that is invoked automatically when the system powers up.

### serial control bus

A two-conductor serial interconnect that is independent of the system bus. This bus links the processor modules, the I/O, the memory, the power subsystem, and the operator control panel.

### serial ROM

In the context of the CPU module, ROM read by the DECchip microprocessor after reset that contains low-level diagnostic and initialization routines.

### SIMM

Single in-line memory module.

### SRM

User interface to console firmware for operating systems that expect firmware compliance with the *Alpha System Reference Manual (SRM)*.

### storage array

A group of mass storage devices, frequently configured as one logical disk.

### StorageWorks

Digital's modular storage subsystem (MSS), which is the core technology of the Alpha SCSI-2 mass storage solution. Consists of a family of low-cost mass storage products that can be configured to meet current and future storage needs.

### superscalar

Describes a processor that issues multiple independent instructions per clock cycle.

### symmetric multiprocessing (SMP)

A processing configuration in which multiple processors in a system operate as equals, dividing and sharing the workload.

### symptom-directed diagnostics (SDDs)

An approach to diagnosing computer system problems whereby error data logged by the operating system is analyzed to capture information about the problem.

### system bus

The hardware structure that interconnects the CPU and memory modules. Data processed by the CPU is transferred throughout the system through the system bus.

### system disk

The device on which the operating system resides.

### TCP/IP

Transmission Control Protocol/Internet Protocol. A set of software communications protocols widely used in UNIX operating environments. TCP delivers data over a connection between applications on different computers on a network; IP controls how packets (units of data) are transferred between computers on a network.

### test-directed diagnostics (TDDs)

An approach to diagnosing computer system problems whereby error data logged by diagnostic programs resident in read-only memory (RBDs) is analyzed to capture information about the problem.

### thickwire

One-half inch, 50-Ohm coaxial cable that interconnects the components in many IEEE standard 802.3-compliant Ethernet networks.

### ThinWire

Ethernet cabling and technology used for local distribution of data communications. ThinWire cabling uses BNC connectors.

### Token Ring

A network that uses tokens to pass data sequentially. Each node on the network passes the token on to the node next to it.

### twisted pair

A cable made by twisting together two insulated conductors that have no common covering.

### uninterruptible power supply (UPS)

A battery-backup option that maintains AC power to a computer system if a power failure occurs.

### warm bootstrap

A subset of the cold bootstrap operation. On AlphaGeneration systems, during a warm bootstrap, the console does not load PALcode, size memory, or initialize environment variables.

### wide area network (WAN)

A high-speed network that connects a server to a distant host computer, PC, or other server, or that connects numerous computers in numerous distant locations.

### Windows NT

''New technology'' operating system owned by Microsoft Corp. The AlphaServer systems currently support the Windows NT, OpenVMS, and DEC OSF/1 operating systems.

### write back

A cache management technique in which data from a write operation to cache is written into main memory only when the data in cache must be overwritten.

### write-enabled

Indicates a device onto which data can be written.

### write-protected

Indicates a device onto which data cannot be written.

### write through

A cache management technique in which data from a write operation is copied to both cache and main memory.

# Index


## A

A: environment variable, 5–7
AC power-up sequence, 2–19
Acceptance testing, 3–18
arc command, 5–4
ARC interface, 5–3
  switching to SRM from, 5–4
AUTOLOAD environment variable, 5–8

## B

Beep codes, 2–2, 2–17, 2–20, 2–21
Boot diagnostic flow, 1–6
Boot menu (ARC), 2–8

## C

Card cage location, 5–18
cat el command, 2–8, 3–7
CD–ROM LEDs, 2–13
CFG files, 2–15
COM2 and parallel port
  loopback tests, 3–4
Commands
  diagnostic, summarized, 3–2
  diagnostic-related, 3–3
  firmware console, functions of, 1–8
  to examine system configuration, 5–4
  to perform extended testing and exercising, 3–3
Configuration
  *See also* ECU
  console port, 5–37
Configuration (cont'd)
  EISA boards, 5–25
  ISA boards, 5–26
  of environment variables, 5–12
  power supply, 5–34, 5–36
  verifying, OpenVMS and DEC OSF/1, 5–9
  verifying, Windows NT, 5–4
Console
  diagnostic flow, 1–4
  firmware commands, 1–8
Console commands, 1–8
  cat el, 3–7
  diagnostic and related, summarized, 3–2
  kill, 3–16
  kill_diags, 3–16
  memory, 3–8
  more el, 3–7
  net -ic, 3–15
  net -s, 3–14
  netew, 3–10
  network, 3–12
  set bootdef_dev, 5–13
  set boot_osflags, 5–13
  set envar, 5–12
  show auto_action, 5–13
  show config, 5–9
  show device, 5–11
  show envar, 5–12
  show memory, 5–12
  show_status, 3–17
  test, 3–4

Console event log, 2–8
Console firmware
  DEC OSF/1, 5–3
  diagnostics, 2–21
  OpenVMS, 5–3
  Windows NT, 5–3
Console interfaces
  switching between, 5–4
Console output, 5–37
Console port configurations, 5–37
CONSOLEIN environment variable, 5–7
CONSOLEOUT environment variable, 5–7
COUNTDOWN environment variable, 5–8
CPU daughter board, 5–19
Crash dumps, 1–9

## D

DC power-up sequence, 2–20
DEC VET, 1–8, 3–18
DECevent, 1–7
Device naming convention
  SRM, 5–11
Devices
  Windows NT firmware device display, 5–6
  Windows NT firmware device names, 5–5
dia command, 4–6
DIAGNOSE command, 4–5
Diagnostic flows
  boot problems, 1–6
  console, 1–4
  errors reported by operating system, 1–7
  power, 1–3
  problems reported by console, 1–5
  RAID, 2–11
Diagnostics
  command summary, 3–2
  command to terminate, 3–3, 3–16
  console firmware-based, 2–21
  firmware power-up, 2–20
Diagnostics (cont'd)
  power-up, 2–1
  power-up display, 2–1
  related commands, 3–3
  related commands, summarized, 3–2
  ROM-based, 1–7, 3–1
  serial ROM, 2–20
  showing status of, 3–17
Digital Assisted Services (DAS), 1–9
Digital UNIX
  event record translation, 4–6

## E

ECU
  ecu command, 5–4, 5–24
  invoking console firmware, 5–23
  procedure for running, 5–23
  procedures, 5–26
  starting up, 5–23
EISA boards
  configuring, 5–25
EISA bus
  features of, 5–21
  problems at power-up, 2–14
  troubleshooting, 2–14
  troubleshooting tips, 2–15
EISA devices
  Windows NT firmware device names, 5–5
Environment variables
  A:, 5–7
  AUTOLOAD, 5–8
  configuring, 5–12
  CONSOLEIN, 5–7
  CONSOLEOUT, 5–7
  COUNTDOWN, 5–8
  default Windows NT firmware, 5–7
  DISABLEPCIPARITYCHECKING, 5–7
  FLOPPY, 5–7
  FLOPPY2, 5–8
  FWSEARCHPATH, 5–7
  other, 5–8
  setting and examining, 5–12
  TIMEZONE, 5–7

Environment variables set during system configuration, 5–13
ERF/uerf, 1–7
Error
handling, 1–7
logging, 1–7
report formatter (ERF), 1–7
Error formatters
DECevent, 4–5
Error log translation
Digital UNIX, 4–6
OpenVMS, 4–5
Error logging, 4–4
event log entry format, 4–4
Ethernet
external loopback, 3–4
Event logs, 1–7
Event record translation
Digital UNIX, 4–5
OpenVMS, 4–5
Exceptions
how PALcode handles, 4–1

## F

Fail-safe loader, 2–17
activating, 2–17
power-up using, 2–17
Fan failure, 1–3
Fault detection/correction, 4–1
KN22A processor module, 4–1
Motherboard, 4–1
SIMM memory, 4–1
Firmware
console commands, 1–8
device names, ARC, 5–5
diagnostics, 3–1
environment variables, ARC, 5–8
power-up diagnostics, 2–20
Fixed media
storage problems, 2–9
Floppy drive
LEDs, 2–13
FLOPPY environment variable, 5–7
FLOPPY2 environment variable, 5–8
Formats
Windows NT firmware device names, 5–5
FRUs, 6–2
FWSEARCHPATH environment variable, 5–7

## H

Hot swap, 6–25

## I

I/O bus, EISA features, 5–21
Information resources, 1–9
Initialization, 3–18
Interfaces
switching between, 5–4
Interrupt lines
and EISA, 2–15
IRQs
and EISA, 2–15
ISA boards
configuring, 5–26

## J

Jumpers
on daughter board, A–4, A–6
on motherboard, A–2

## K

kill command, 3–16
kill_diags command, 3–16

## L

LEDs
CD–ROM drive, 2–13
floppy drive, 2–13
storage device, 2–11
StorageWorks, 2–12

Logs
event, 1–7
Loopback tests, 1–8
COM2 and parallel ports, 3–4
command summary, 3–3

## M

Machine check/interrupts, 4–2
processor, 4–2
processor corrected, 4–2
system, 4–2
Maintenance strategy, 1–1
service tools and utilities, 1–7
Mass storage
described, 5–28
Mass storage problems
at power-up, 2–9
fixed media, 2–9
removable media, 2–9
memory command, 3–8
Memory module
configuration, 5–19
displaying information for, 5–12
minimum and maximum, 5–19
Memory tests, 2–4
Memory, main
exercising, 3–8
Modules
CPU, 5–19
memory, 5–19
motherboard, 5–20
more el command, 3–7
Motherboard, 5–20

## N

net -ic command, 3–15
net -s command, 3–14
netew command, 3–10
network command, 3–12

## O

OpenVMS
event record translation, 4–5
Operating system
boot failures, reporting, 1–7
crash dumps, 1–9
exercisers, 1–8
Operator interfaces, switching between, 5–4
Options
system bus, 5–17

## P

PCI bus
problems at power-up, 2–16
troubleshooting, 2–16
Power problems
diagnostic flow, 1–3
Power supply
cables, 5–36
configuration, 5–34, 5–36
redundant, configuring, 5–34
Power-on tests, 2–19
Power-up
diagnostics, 2–20
displays, interpreting, 2–1
screen, 2–7
sequence, 2–19
AC, 2–19
DC, 2–20
Processor machine check, 4–3
Processor-corrected machine check, 4–4

## R

RAID
diagnostic flow, 2–11
Removable media
storage problems, 2–9
ROM-based diagnostics (RBDs), 1–7
diagnostic-related commands, 3–3
performing extended testing and exercising, 3–3

ROM-based diagnostics (RBDs) (cont'd)
running, 3–1
utilities, 3–2

## S

SCSI bus
on-board, 5–29
SCSI devices
Windows NT firmware device names, 5–5, 5–6
Serial ports, 5–37
Serial ROM diagnostics, 2–20
Service
tools and utilities, 1–7
set command (SRM), 5–12
show command (SRM), 5–12
show configuration command (SRM), 5–9
show device command (SRM), 5–11
show memory command (SRM), 5–12
show_status command, 3–17
SIMMs, 5–19
troubleshooting, 2–4
SRM interface, 5–3
switching to ARC from, 5–4
SROM memory tests, 2–4
Storage device LEDs, 2–11
Storage shelf
*See* StorageWorks
StorageWorks
internal, 5–29, 5–32
internal, configuring, 5–31, 5–33
LEDs, 2–12
System
architecture, 5–2
options, 5–17
power-up display, interpreting, 2–1
troubleshooting categories, 1–2
System bus
location, 5–18
System machine check, 4–3
System module devices
Windows NT firmware device names, 5–5

## T

test command, 3–4
Testing
*See also* Commands; Loopback tests
acceptance, 3–18
command summary, 3–2
commands to perform extended exercising, 3–3
memory, 3–8
with DEC VET, 3–18
TIMEZONE environment variable, 5–7
Tools, 1–7
console commands, 1–7, 1–8
crash dumps, 1–9
DEC VET, 1–8
DECevent, 1–7
ERF/uerf, 1–7
error handling, 1–7
log files, 1–7
loopback tests, 1–8
RBDs, 1–7
Training, 1–9
Troubleshooting
*See also* Diagnostics; RAID diagnostic flow
actions before beginning, 1–1
boot problems, 1–6
categories of system problems, 1–2
crash dumps, 1–9
diagnostic flows, 1–4, 1–5, 1–6, 1–7
EISA problems, 2–14
error report formatter, 1–7
errors reported by operating system, 1–7
interpreting error beep codes, 2–2
mass storage problems, 2–9
PCI problems, 2–16
power problems, 1–3
problem categories, 1–2
problems getting to console, 1–4
problems reported by the console, 1–5
RAID, 2–11
SIMMs, 2–4

Troubleshooting (cont'd)
with DEC VET, 1–8
with loopback tests, 1–8
with operating system exercisers, 1–8
with ROM-based diagnostics, 1–7

## W

Windows NT firmware
Available hardware devices display, 5–6
default environment variables, 5–7
device names, 5–5

# How to Order Additional Documentation

## Technical Support

If you need help deciding which documentation best meets your needs, call 800-DIGITAL (800-344-4825) and press 2 for technical assistance.

## Electronic Orders

If you wish to place an order through your account at the Electronic Store, dial 800-234-1998, using a modem set to 2400- or 9600-baud. You must be using a VT terminal or terminal emulator set at 8 bits, no parity. If you need assistance using the Electronic Store, call 800-DIGITAL (800-344-4825) and ask for an Electronic Store specialist.

## Telephone and Direct Mail Orders

| From | Call | Write |
|---|---|---|
| U.S.A. | DECdirect<br>Phone: 800-DIGITAL<br>(800-344-4825)<br>Fax: (603) 884-5597 | Digital Equipment Corporation<br>P.O. Box CS2008<br>Nashua, NH 03061 |
| Puerto Rico | Phone: (809) 781-0505<br>Fax: (809) 749-8377 | Digital Equipment Caribbean, Inc.<br>3 Digital Plaza, 1st Street<br>Suite 200<br>Metro Office Park<br>San Juan, Puerto Rico 00920 |
| Canada | Phone: 800-267-6215<br>Fax: (613) 592-1946 | Digital Equipment of Canada Ltd.<br>100 Herzberg Road<br>Kanata, Ontario, Canada K2K 2A6<br>Attn: DECdirect Sales |
| International | ———— | Local Digital subsidiary or approved distributor |
| Internal Orders[1]<br>(for software documentation) | DTN: 264-3030<br>(603) 884-3030<br>Fax: (603) 884-3960 | U.S. Software Supply Business<br>Digital Equipment Corporation<br>10 Cotton Road<br>Nashua, NH 03063-1260 |
| Internal Orders<br>(for hardware documentation) | DTN: 264-3030<br>(603) 884-3030<br>Fax: (603) 884-3960 | U.S. Software Supply Business<br>Digital Equipment Corporation<br>10 Cotton Road<br>Nashua, NH 03063-1260 |

[1]Call to request an Internal Software Order Form (EN–01740–07).

# Reader's Comments

**AlphaServer 1000**
**Service Guide**
**EK–DTLSV–SV. B01**

Your comments and suggestions help us improve the quality of our publications.

Thank you for your assistance.

| **I rate this manual's:** | Excellent | Good | Fair | Poor |
|---|---|---|---|---|
| Accuracy (product works as manual says) | ☐ | ☐ | ☐ | ☐ |
| Completeness (enough information) | ☐ | ☐ | ☐ | ☐ |
| Clarity (easy to understand) | ☐ | ☐ | ☐ | ☐ |
| Organization (structure of subject matter) | ☐ | ☐ | ☐ | ☐ |
| Figures (useful) | ☐ | ☐ | ☐ | ☐ |
| Examples (useful) | ☐ | ☐ | ☐ | ☐ |
| Index (ability to find topic) | ☐ | ☐ | ☐ | ☐ |
| Page layout (easy to find information) | ☐ | ☐ | ☐ | ☐ |

I would like to see more/less _____

_____

What I like best about this manual is _____

_____

What I like least about this manual is _____

_____

I found the following errors in this manual:

Page Description

_____ _____

_____ _____

_____ _____

Additional comments or suggestions to improve this manual:

_____

_____

_____

For software manuals, please indicate which version of the software you are using: _____

_____

Name/Title _____ Dept. _____

Company _____ Date _____

Mailing Address _____

_____ Phone _____

Do Not Tear – Fold Here and Tape

digital™

No Postage
Necessary
If Mailed
in the
United States

# BUSINESS REPLY MAIL

FIRST CLASS PERMIT NO. 33 MAYNARD MASS.

POSTAGE WILL BE PAID BY ADDRESSEE

DIGITAL EQUIPMENT CORPORATION
Shared Engineering Services
MLO5-5/E76
2 THOMPSON STREET
MAYNARD, MA 01754-1716

Do Not Tear – Fold Here