AlphaServer 2100 RM Series

Installation/Owner's Guide

Order Number: EK-KN450-RM. B01

1st Edition, May 1994
2nd Edition, December 1994

The information in this document is subject to change without notice and should not be construed as a commitment by Digital Equipment Corporation. Digital Equipment Corporation assumes no responsibility for any errors that may appear in this document.

Restricted Rights: Use, duplication, or disclosure by the U.S. Government is subject to restrictions set forth in subparagraph (c)(1)(ii) of the Rights in Technical Data and Computer Software clause at DFARS 252.227-7013.

FCC NOTICE: This equipment has been tested and found to comply with the limits for a Class A digital device, pursuant to Part 15 of the FCC Rules. These limits are designed to provide reasonable protection against harmful interference when the equipment is operated in a commercial environment. This equipment generates, uses, and can radiate radio frequency energy and, if not installed and used in accordance with the instruction manual, may cause harmful interference to radio communications.

Any changes or modifications made to this equipment may void the user's authority to operate this equipment.

Operation of this equipment in a residential area may cause interference in which case the user at his own expense will be required to take whatever measures may be required to correct the interference.

© Digital Equipment Corporation 1994. All Rights Reserved.

Printed in U.S.A.

The following are trademarks of Digital Equipment Corporation: AlphaServer, Alpha AXP, AXP, DEC, DECchip, Digital, OpenVMS, StorageWorks, ThinWire, VAX DOCUMENT, VMScluster, and the DIGITAL logo.

Intel is a trademark of Intel Corporation.
NCR is a registered trademark of NCR Corporation.
OSF/1 is a registered trademark of Open Software Foundation, Inc.
PostScript is a registered trademark of Adobe Systems Incorporated.
Windows NT is a trademark of Microsoft Corporation.

All other trademarks and registered trademarks are the property of their respective owners.

This document was prepared using VAX DOCUMENT Version 2.1.

EC:

Warning! This is a Class A product. In a domestic environment this product may cause radio interference in which case the user may be required to take adequate measures.

Achtung! Dieses ist ein Gerät der Funkstörgrenzwerklasse A. In Wohnbereichen können bei Betrieb dieses Gerätes Rundfunkstörungen auftreten, in welchen Fällen der Benutzer für entsprechende Gegenmaßnahmen verantwortlich ist.

Attention! Ceci est un produit de Classe A. Dans un environnement domestique, ce produit risque de créer des interférences radioeléctriques, il appartiendra alors à l'utilisateur de prendre les mesures spécifiques appropriées.

ACOUSTICS: Preliminary declared values per ISO 9296 and ISO 7779 (March 10, 1994):

	Sound Power Level L_{wAd}, B	**Sound Pressure Level L_{pAm}, dBA (Bystander Positions)**
Idle	6.5	50
Operating	6.5	50

Current values for specific configurations are available from Digital representatives. 1 B = 10 dBA.

SCHALLEMISSIONSWERTE: Verläufige Werteangaben nach ISO 9296 und ISO 7779/DIN EN27779 (10 March 1994):

	Schalleistungspegel L_{wAd}, B	**Schalldruckpegel L_{pAm}, dBA (Zuschauerpositionen)**
Leerlauf	6.5	50
Betrieb	6.5	50

Aktuelle Werte für spezielle Ausrüstungsstufen sind über die Digital Equipment Vertretungen erhältlich. 1 B = 10 dBA.

Für Bundesrepublik Deutschland
For Federal Republic of Germany
Pour la République féderale d'Allemagne

Hochfrequenzgerätezulassung und Betriebsgenehmigung

Bescheinigung des Herstellers/Importeurs:
Hiermit wird bescheinigt, daß die Einrichtung in Übereinstimmung mit den Bestimmungen der DBP-Verfügung 523/1969, Amtsblatt 113/1969, und Grenzwertklasse "A" der VDE0871, funkentstört ist.

Das Bundesamt für Zulassungen in der Telekommunikation (BZT), hat diesem Gerät eine EMV-Zulassungsnummer zugeteilt.

Betriebsgenehmigung:
Hochfrequenzgeräte dürfen erst in Betrieb genommen werden, nachdem hierfür von der für den vorgesehenen Aufstellungsort zuständigen Außenstelle des Bundesamtes für Post und Telekommunikation (BAPT) die Genehmigung erteilt ist.

Als Antrag auf Erteilung einer Genehmigung dient eine Anmeldepostkarte (Anhang des Handbuches) mit Angabe der EMV-Zulassungsnummer.

Der untere Teil der Anmeldepostkarte ist vom Betreiber zu vervollständigen und an die örtliche Außenstelle des Bundesamtes für Post und Telekommunikation (BAPT) zu schicken. Der obere Teil bleibt beim Gerät.

Betreiberhinweis:
Das Gerät wurde funktechnisch sorgfältig entstört und geprüft. Die Kennzeichnung mit der Zulassungsnummer bietet Ihnen die Gewähr, daß dieses Gerät keine anderen Fernmeldeanlagen einschließlich Funkanlagen stört.

Sollten bei diesen Geräten ausnahmsweise trotzdem, z.B. im ungünstigsten Fall beim Zusammenschalten mit anderen EDV-Geräten, Funkstörungen auftreten kann das im Einzelnen zusätzliche Funkentstörungsmaßnahmen durch den Benutzer erfordern.

Bei Fragen hierzu wenden Sie sich bitte an die örtlich zuständige Außenstelle Ihres Bundesamtes für Post und Telekommunikation (BAPT).

Externe Datenkabel:
Sollte ein Austausch der von Digital spezifizierten Datenkabel nötig werden, muß der Betreiber für eine einwandfreie Funkentstörung sicherstellen, daß Austauschkabel im Aufbau und Abschirmqualität dem Digital Originalkabel entsprechen.

Kennzeichnung:
Die Geräte werden bereits in der Fertigung mit der Zulassungsnummer gekennzeichnet und mit einer Anmeldepostkarte versehen. Sollte Kennzeichnung und Anmeldepostkarte übergangsweise nicht mit ausgeliefert werden kontaktieren Sie bitte das nächstgelegene Digital Equipment Kundendienstbüro.

この装置は，第一種情報装置（商工業地域において使用されるべき情報装置）で商工業地域での電波障害防止を目的とした情報処理装置等電波障害自主規制協議会（VCCI）基準に適合しております。

従って，住宅地域またはその隣接した地域で使用すると，ラジオ，テレビジョン受信機等に受信障害を与えることがあります。

取扱説明書に従って正しい取り扱いをして下さい。

Contents

Preface xv

1 Introduction

In This Chapter 1–1
The AlphaServer 2100 RM Series System 1–1
Characteristics 1–3
Components and Controls 1–5
Location of the Controls and Components 1–5
Components: Front of System 1–6
Operator Control Panel (OCP) 1–7
OCP Door 1–8
Components: Top of System 1–9
Components: Left Side of System 1–10
Components: Rear of System 1–11
Components: Bottom of System 1–12

2 Installation

In This Chapter 2–1
Before Installing the System 2–1
Verifying the Site Preparation 2–2
Overview 2–2
Power Requirements 2–4
Power Cords 2–6
Tools Required 2–7
Unpacking the Shipment 2–8
Checking the Shipment 2–8
Accessories 2–9
Installing the System Slides 2–11
Overview 2–11
Tools Required 2–11
Preparing the Slides 2–11

Attaching the Slide Races 2–15
Attaching the Power Cords 2–17
Cabinet Stability 2–18
Cabinet Rail-Hole Pattern (English RETMA) 2–19
Determining the Installation Area (English RETMA) 2–19
Cabinet Rail-Hole Pattern (Metric RETMA) 2–21
Determining the Installation Area (Metric RETMA) 2–21
Installing the U-Nuts 2–23
Attaching the Slides to the Cabinet Rails 2–23
Mounting the System on the Slides 2–25
Aligning the System Slides to the Cabinet Rails 2–27
Using the Interlock System 2–29
Installing the Interlock Actuator Bracket 2–29
Installing the Interlock Actuator Latches 2–31
Installing the Cable Management System 2–34
Cable Management: Cable Routing Guidelines 2–36
Installing Keyboard/Mouse Extension Cables 2–38
Expanding the System 2–40
Turning the System On 2–42
Overview 2–42
Before You Begin 2–42
Checking the System Settings 2–43
Connecting the Terminal 2–44
Applying Power to the System 2–46
Checking the Diagnostic Indicators 2–48
Preboot Tasks 2–51
Switching Between Operating Systems 2–54
Booting the Operating System 2–55
Autobooting the Operating System 2–56
Turning the System Off 2–57
Before You Begin 2–57
Turning Off the DC Power 2–57
Extended Power-Down (AC Power) 2–59
Invoking Console Mode 2–60
Console Subsystem 2–60
Console Terminal 2–60
Console Mode 2–60
Invoking Console Mode 2–60
Using the Halt Button 2–61
Remote Access 2–61
Connecting to Networks 2–62
Overview 2–62
Ethernet 2–62

Connecting Peripherals 2–64
Serial/Parallel Connections 2–64
Terminal Connections 2–66
Installing and Removing the Front Bezel 2–68

3 Operation

In This Chapter 3–1
Operator Control Panel 3–2

4 Options and Upgrades

In This Chapter 4–1
Upgrade Overview 4–2
Planning Your Upgrade 4–2
Adding Third-Party Devices 4–3
Supported Options 4–4
Ordering Options 4–4
Verifying System Configuration 4–5
Before You Begin 4–5
Firmware Menu Options for Windows NT 4–5
Firmware Console Commands for DEC OSF/1 and OpenVMS 4–6
show config 4–6
show device 4–9
show memory 4–11
Setting and Showing Environment Variables 4–12
System Bus Options 4–13
CPU Modules 4–14
Memory Modules 4–15
Extended I/O (64-Bit PCI) Module 4–15
Standard I/O Module 4–16
EISA Bus Options 4–17
ISA Bus Options 4–18
Identifying EISA and ISA Options 4–19
Configuring EISA and ISA Options 4–20
EISA Configuration Utility 4–20
System Configuration Diskette 4–20
Before Running the ECU 4–21
Starting the ECU 4–22
Configuring EISA Options 4–24
Configuring EISA/ISA Options 4–26
PCI Bus Options 4–28

SCSI Buses 4–30
Native SCSI Bus 4–30
Internal SCSI Cables for 3-Channel RAID EISA Controller 4–31
Installing the 2T-SWXCK-AA Cable Kit 4–31
Installing Removable Media Storage Devices 4–33
Installing Internal DSSI Cables 4–37
Internal DSSI Cable for EISA-to-DSSI Adapters 4–37
Installing the Internal DSSI Cable 4–37
Power Supply Configurations 4–39
Installing the 2T-450HR Power Supply Kit 4–41
Console Port Configurations 4–47

5 Troubleshooting the System

In This Chapter 5–1
Determining the Service Provider 5–2
Determine the Service Provider 5–2
Considerations Before Troubleshooting 5–2
Identifying Problems 5–3
Task Overview 5–4
Identifying and Resolving Problems 5–4
Determining the Type of Problem 5–5
Types of System Problems 5–5
Reporting Problems 5–6
Precall Checklist 5–6
Digital Support Center Contact Numbers 5–6
Power Problems 5–10
Problems Getting to Console Mode 5–11
Interpreting the OCP Power-Up/Diagnostic Display 5–12
Console Reported Problems 5–14
show fru 5–16
test 5–17
Mass-Storage Problems Indicated at Power-Up 5–19
EISA Bus Problems Indicated at Power-Up 5–22
Additional EISA Troubleshooting Tips 5–24
PCI Bus Problems Indicated at Power-Up 5–25
Boot Problems 5–26
Operating System Reported Problems 5–27
Fail-Safe Loader 5–28
Fail-Safe Loader Functions 5–29
Activating the Fail-Safe Loader 5–29

A Hardware Specifications

In This Appendix A–1
System Specifications A–2
System Dimensions A–2
Electrical Specifications A–3
Environmental Conditions A–4

Index

Examples

2–1 Boot Menu Example 2–50

Figures

1–1 AlphaServer 2100 RM Series System 1–2
1–2 Front Components 1–6
1–3 Operator Control Panel (OCP) 1–7
1–4 Unlocking the OCP Door 1–8
1–5 Top Components 1–9
1–6 Left-Side Components 1–10
1–7 Rear Components 1–11
1–8 Bottom Access Door 1–12
2–1 System Clearance and Service Area 2–3
2–2 Power Requirements 2–5
2–3 Attaching the Brackets to the Right Slide Assembly (English RETMA) 2–12
2–4 Attaching the Slide Races 2–16
2–5 Attaching the Power Cord 2–18
2–6 Installation Area and Mounting Holes (English RETMA) . . . 2–20
2–7 Installation Area and Mounting Holes (Metric RETMA) 2–22
2–8 Attaching the Slides to the Cabinet Rails 2–24
2–9 Mounting the System on the Slides 2–26
2–10 Aligning the System Slides to the Cabinet Rails 2–28
2–11 Installing the Interlock Actuator Bracket 2–30
2–12 The Interlock System 2–33
2–13 Installing the Cable Management Brackets 2–35

2–14	Example of Cable Routing	2–37
2–15	Installing the Keyboard/Mouse Extension Cables	2–40
2–16	SCSI Expansion and Optional RAID and/or DSSI Ports	2–41
2–17	Powered-Down System Settings	2–43
2–18	Connecting the Terminal	2–45
2–19	Applying Power to the System	2–47
2–20	System Startup Diagnostic Indicators	2–48
2–21	Turning Off the System	2–58
2–22	Turning Off the AC Power	2–59
2–23	Ethernet Network Connections	2–63
2–24	Connecting Serial and Parallel Devices	2–65
2–25	Terminal Connections	2–67
2–26	Installing/Removing the Front Bezel	2–69
3–1	Operator Control Panel	3–2
4–1	Device Name Convention	4–9
4–2	System Bus Option Locations	4–13
4–3	System Bus Configurations According to the Number of CPUs	4–14
4–4	EISA and ISA Boards	4–19
4–5	PCI Board	4–29
4–6	Installing the 2T-SWXCK-AA RAID Cable Kit	4–32
4–7	Installing Removable Media	4–34
4–8	Installing a Hard-Disk Drive	4–36
4–9	Installing the Internal DSSI Cable	4–38
4–10	Power Supply Configurations	4–40
4–11	Installing the AlphaServer 2100 RM Series Power Supply	4–42
4–12	Connecting the 12 V and Power Supply Control Cables	4–43
4–13	Connecting the +3 V and +5 V Power Supply Leads	4–44
4–14	Jumper J3 Location on the Standard I/O Module	4–45
5–1	Fail-Safe Loader Jumper (J6) on the Standard I/O Module	5–30

Tables

1–1	System Characteristics	1–3
2–1	Power Cord Order Numbers	2–6
2–2	Accessory Kit Contents (PN: 70-31577-01)	2–9
4–1	Summary of Procedure for Configuring EISA Bus (EISA Options Only)	4–25
4–2	Summary of Procedure for Configuring EISA Bus with ISA Options	4–27
5–1	How to Identify a Problem	5–3
5–2	Identifying and Resolving Problems	5–4
5–3	Problem Reference	5–5
5–4	Digital Support Centers	5–7
5–5	Diagnostic Flow for Power Problems	5–10
5–6	Diagnostic Flow for Problems Getting to Console Mode	5–11
5–7	Interpreting the OCP Power-Up/Diagnostic Display	5–12
5–8	Diagnostic Flow for Problems Reported by the Console Program	5–14
5–9	Fixed-Media Mass-Storage Problems	5–20
5–10	Removable-Media Mass-Storage Problems	5–21
5–11	EISA Troubleshooting	5–23
5–12	PCI Troubleshooting	5–25
5–13	Diagnostic Flow for Boot Problems	5–26
5–14	Diagnostic Flow for Errors Reported by the Operating System	5–27
A–1	Rackmount System Dimensions	A–2
A–2	System Electrical Specifications	A–3
A–3	System Environmental Conditions	A–4

Preface

Purpose of This Guide

This guide along with the *AlphaServer 2100 Series Owner's Guide* describe how to operate, troubleshoot, and maintain the AlphaServer 2100 RM series system.

This guide describes the rackmount system, the associated options and upgrades, and how to install and troubleshoot the system.

Who Should Use This Guide

This guide is for Digital service personnel or qualified self-maintenance customers who are familiar with installing computer systems, and for system managers and others who perform system management tasks.

Structure of This Guide

This guide is organized in the following manner:

- **Chapter 1 —** Introduces the system and describes the basic system management tasks.
- **Chapter 2 —** Describes how to install the system.
- **Chapter 3 —** Describes how to operate the operator control panel (OCP).
- **Chapter 4 —** Describes how to identify the system configuration and how to change the configuration.
- **Chapter 5 —** Explains how to identify and resolve system problems that prevent proper operation.
- **Appendix A —** Provides the system hardware specifications.

Related Documents

Other documents related to the AlphaServer 2100 RM series system include the following:

- *AlphaServer 2100 Series Owner's Guide* (EK-KN450-OP)
- *AlphaServer 2100 Windows NT Release Notes* (EK-WNTFS-IN)
- *AXP Systems DSSI VMScluster Installation and Troubleshooting* (EK-D4AXP-TS)
- *AlphaServer 2000/2100/2100 RM/2100 CAB Series Service Guide* (EK-KN450-SV)
- *OpenVMS AXP Alpha System Dump Analyzer Utility Manual* (AA-PV6UB-TE)
- *Guide to Kernel Debugging* (AA-PS2TA-TE)
- *DEC Verifier and Exerciser Tool User's Guide* (AA-PTTMA-TE)

Conventions Used in This Guide

This guide uses the following conventions:

Convention	Meaning
Note	A note calls the reader's attention to any item of information that may be of special importance.
Caution	A caution contains information essential to avoid damage to the equipment.
Warning	A warning contains information essential to the safety of personnel.
❶	Circled numbers provide a link between figures and text.
`MONOSPACE`	Text displayed on the screen is shown in monospace type.
bold type	Bold type denotes user input.
italic type	Italic type emphasizes important information, indicates variables, and indicates complete titles of manuals.
n.nn	A period in numerals signals the decimal point indicator. For example, *1.75* equals *one and three-fourths*.
Ctrl/*x*	Ctrl/*x* indicates that you hold down the Ctrl key while you press another key or mouse button (indicated here by *x*).
Return	Specific keys such as the Return key are represented in boxes.
x	A lowercase italic *x* indicates the generic use of a letter. For example, *xxx* indicates any combination of three alphabetic characters.
n	A lowercase italic *n* indicates the generic use of a number. For example, 19*nn* indicates a 4-digit number in which the last 2 digits are unknown.
[ ]	In format descriptions, brackets indicate optional elements. You can choose none, one or more, or all of the options.

For a listing of terms used in the AlphaServer 2100 RM series system documentation, refer to the Glossary contained in the *AlphaServer 2100 Series Owner's Guide*.

Safety Symbols

The following symbols appear on the system. Please review their definitions below:

This Attention symbol is used to alert readers about specific safety conditions. When this symbol appears on equipment, the user should read separate instructional material related to the particular safety condition being addressd.

Warning: CPU and Memory modules have parts that operate at high temperatures. Wait two minutes after power is removed before handling these modules.

Warning: This area contains electrical energy. Disconnect the ac power cord(s) to the system before accessing this area.

Warning: High voltage shock hazard present inside the power supply.

1
Introduction

In This Chapter

This chapter introduces the AlphaServer 2100 RM series system and the location of the system components and controls.

The AlphaServer 2100 RM Series System

The AlphaServer 2100 RM series system (refer to Figure 1–1) is a high-performance superserver for multiuser environments. The system is contained in a slide-mounted chassis that fits into a standard 48.26-cm (19-in.) cabinet. The system complies with the Electronic Industries Association (EIA) standard 310C and the International Electrotechnical Commission (IEC) 297 standards that enable installation into a cabinet with rails with either the English RETMA (Radio Electronics Television Manufacturers Association) or metric RETMA rail-hole pattern.

The AlphaServer 2100 RM series system is part of the AlphaServer 2100 product line. This product line is a family of Alpha AXP, symmetric multiprocessor, server systems that are supported by multiple operating systems (DEC OSF/1®, OpenVMS, Windows NT ™). These server systems are suitable for several computing environments: general-purpose commercial, high-performance application and database, and PC LAN server.

The server's CPU is based on the DECchip 21064 processor chip running at 190 MHz or the DECchip 21064A processor chip running at 275 MHz. Upgrades to successive generations of CPUs are planned.

Figure 1–1 AlphaServer 2100 RM Series System

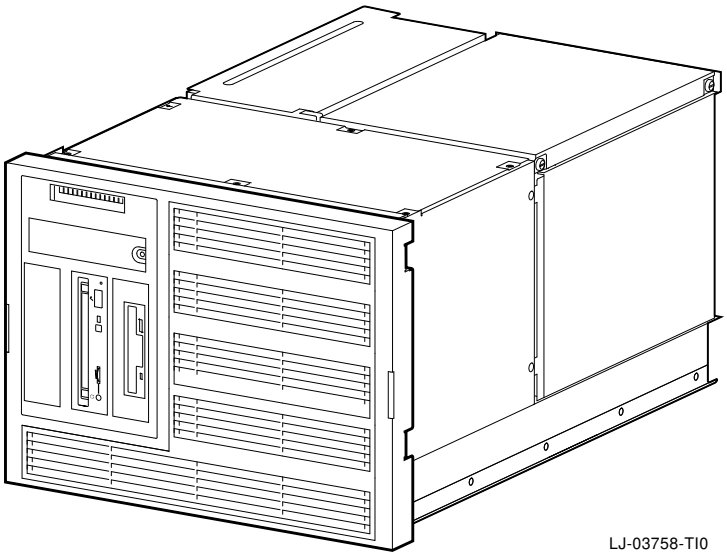

Characteristics

Table 1–1 highlights the specific characteristics of the AlphaServer 2100 RM series system.

Table 1–1 System Characteristics

Characteristic	Description
Four–processor capability	May be configured as a uniprocessor or up to four processors.
High-performance PCI I/O subsystem	Peripheral Component Interconnect (PCI) is the emerging industry-standard bus that supports Digital and third-party options. The current implementation of PCI on the server has a peak bandwidth of 132 MB/s.
EISA I/O bus	33 MB/s EISA I/O bus supports industry-standard EISA options, such as: Network adapters Video/audio options Storage adapters
Internal mass storage	Up to two, 5.25-in. half-height hard-disc-drive storage devices. One device is standard in non-RAID (redundant array of inexpensive disks) configurations and a second is optional. Up to 2 GB per drive.
External storage devices	Supports external StorageWorks compatible storage devices for low-cost, high-capacity, flexible configurations. This provides the ability to have many independent disks that may be configured in stripe sets, shadow sets, or RAID sets to optimize performance according to customer requirements.
High availability	Supports disk hot swap in external StorageWorks shelves as well as clustering (currently, only for OpenVMS) with proper software and controllers.

(continued on next page)

Table 1–1 (Cont.) System Characteristics

Characteristic	Description
CPU chip technology	The DECchip 21064 and the DECchip 21064A are manufactured by using Digital's state-of-the-art CMOS process. This process uses a feature size of 0.75 micron and the chip contains 1.7 million transistors on one die.
CPU clock rates	190 MHz for DECchip 21064 and 275 MHz for DECchip 21064A
CPU chip design features	Superscalar, superpipelined
System bus bandwidth	667 MB/s (128-bit, 24-ns cycle)
Memory	Up to 2 GB of main memory

Components and Controls

Location of the Controls and Components

System components and controls are located at the front, top, left side, rear, and bottom of the system.

Components: Front of System

Figure 1–2 shows the components on the front of the system.

Figure 1–2 Front Components

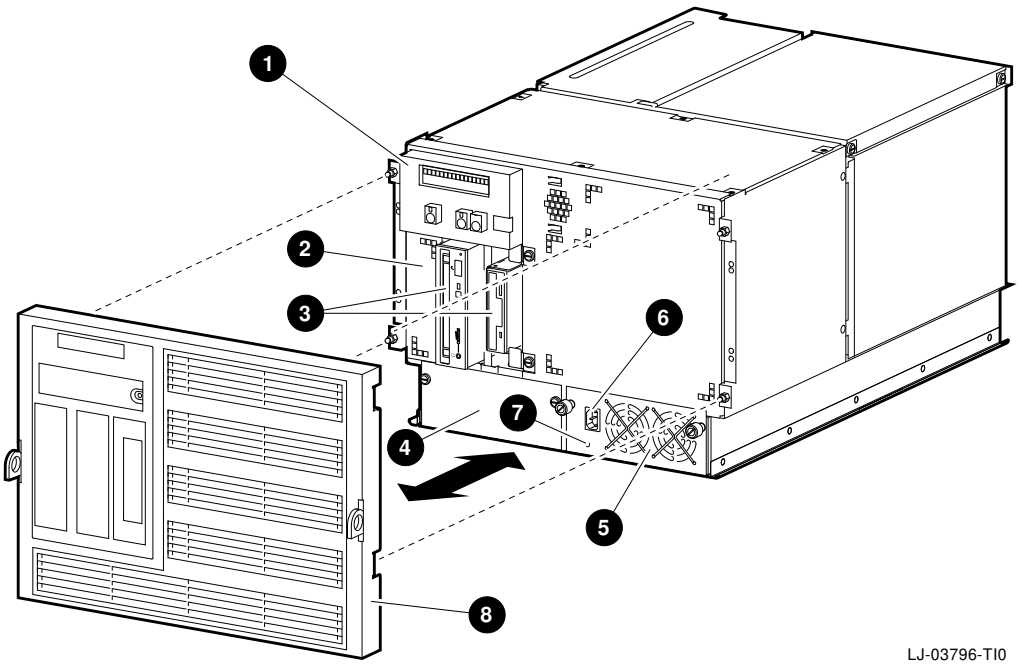

❶ Operator control panel (OCP)
❷ Optional slot for removable-media mass-storage devices
❸ Removable-media mass-storage devices
❹ Location for optional redundant power supply
❺ Power supply
❻ Power connector, ac (the system does not have an ac power switch)
❼ Power supply DC Okay indicator
❽ Front bezel

For information about mass-storage controls, refer to device-specific information in Chapter 4 of this guide.

Operator Control Panel (OCP)

Figure 1–3 shows the individual controls and indicators on the OCP.

Figure 1–3 Operator Control Panel (OCP)

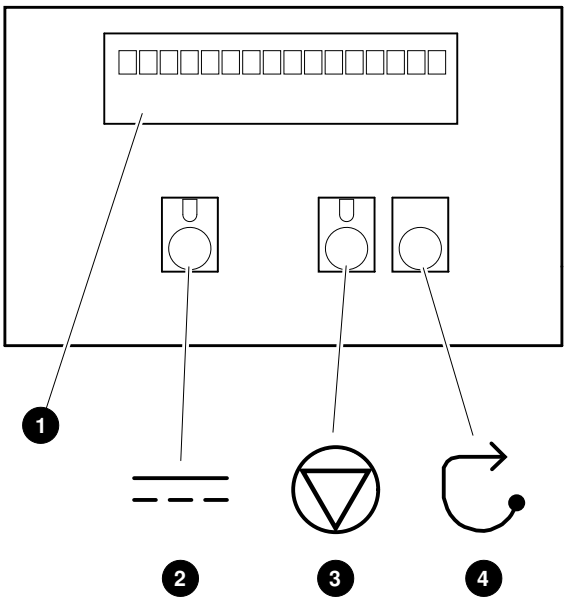

LJ-03778-TI0

❶ Power-up/diagnostic display
❷ DC On/Off button
❸ Halt button (DEC OSF/1 and OpenVMS systems only)
❹ Reset button

OCP Door

After the system is installed in a cabinet, the OCP door allows access to the OCP controls without removing the front bezel. To open the OCP door, unlock the door ❶ and pull the upper-right edge ❷ of the door away from the system as shown in Figure 1–4.

Figure 1–4 Unlocking the OCP Door

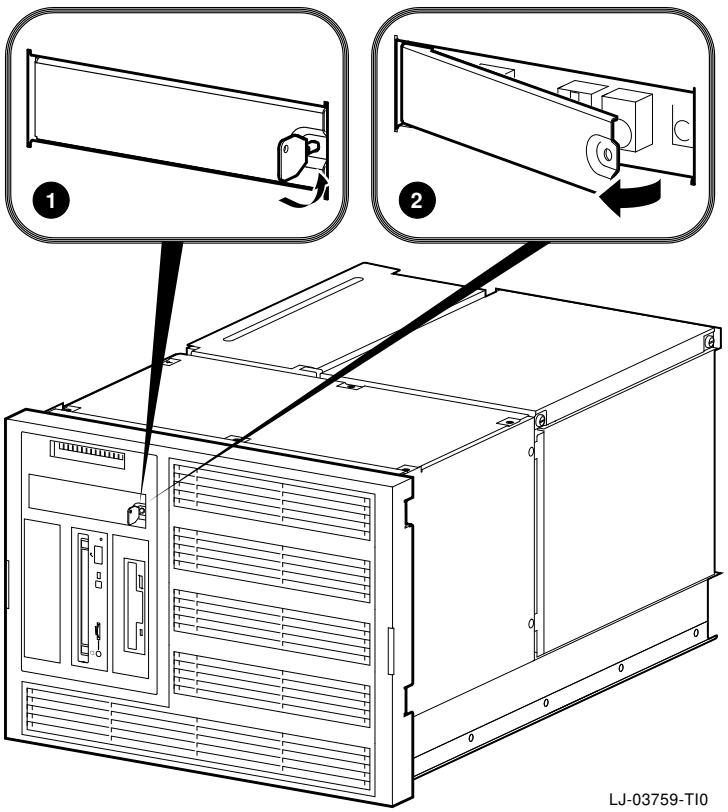

Components: Top of System

Figure 1–5 shows the location of the top-rear access cover to the module card-cage area and the top-front access cover to the area containing the fan assembly, removable-media mass-storage device, and fixed-media mass-storage device(s).

Warning: CPU and Memory modules have parts that operate at high temperatures. Wait two minutes after power is removed before handling these modules.

Figure 1–5 Top Components

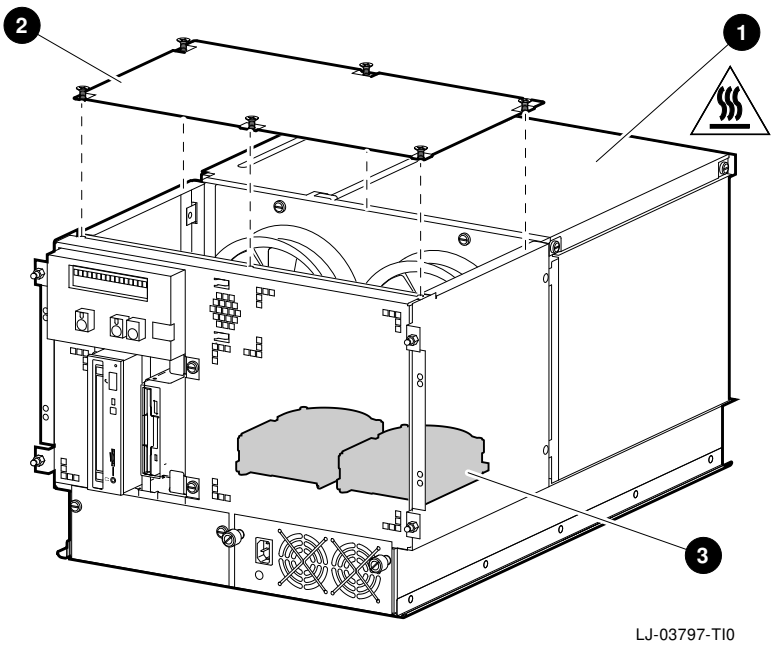

❶ Top-rear access cover
❷ Top-front access cover
❸ Fixed-media mass-storage device (second device is optional)

Components: Left Side of System

Figure 1–6 shows how to access the PCI and EISA input/output (I/O) interface boards via the left-side access door.

Warning: For protection against fire, only use modules with current-limited outputs.

Figure 1–6 Left-Side Components

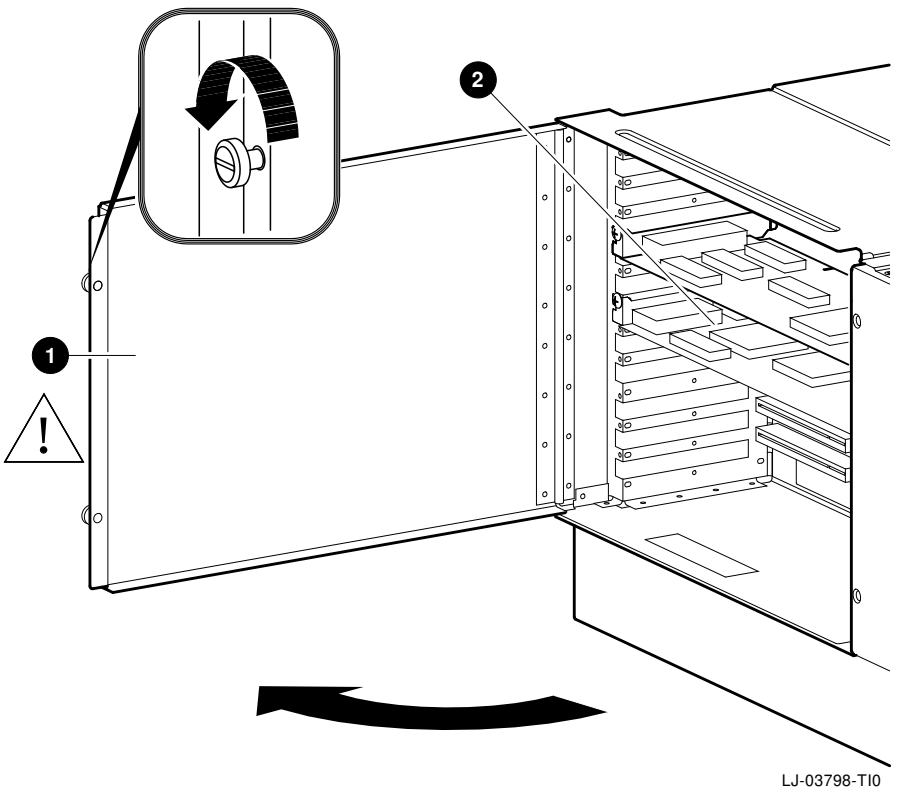

❶ Left-side access door ❷ I/O interface boards

Components: Rear of System

Figure 1–7 shows the major components at the rear of the system.

Figure 1–7 Rear Components

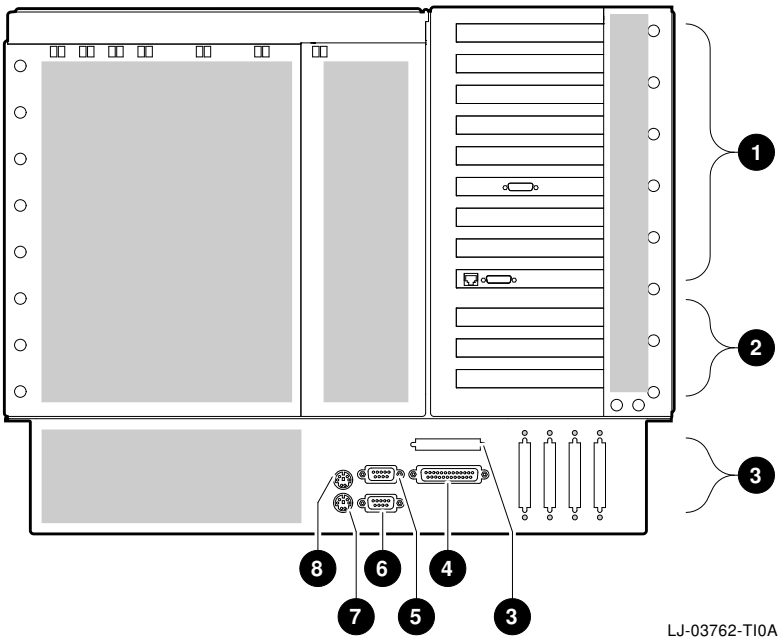

❶ EISA board bulkhead
❷ PCI board bulkhead
❸ SCSI/DSSI expansion ports
❹ Parallel port
❺ Serial port (COM1)
❻ Serial port (COM2)
❼ Mouse port
❽ Keyboard port

Components: Bottom of System

Figure 1–8 shows the bottom access door. This door provides service access to the power supply connections and the SCSI, parallel, serial (COM1 and COM2), mouse, and keyboard ports.

Warning: This area contains electrical energy. Disconnect the ac power cord(s) to the system before accessing this area.

Figure 1–8 Bottom Access Door

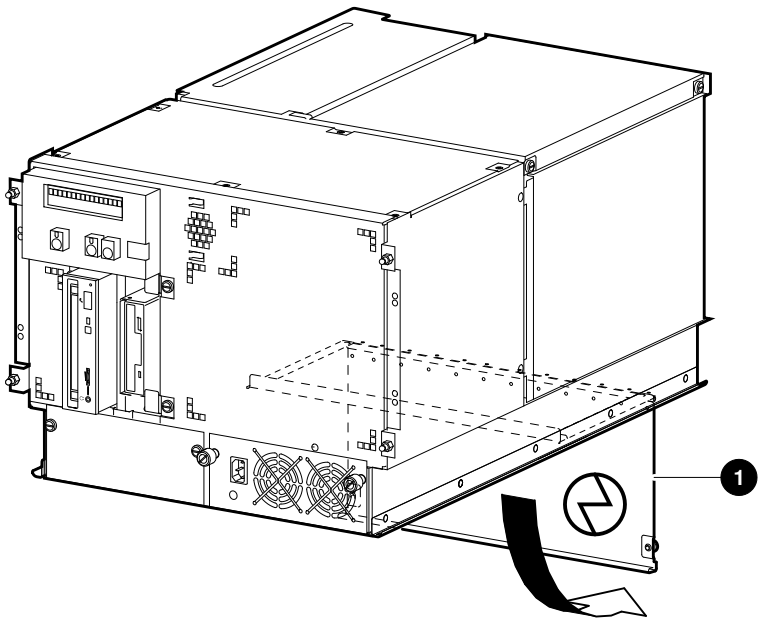

❶ Bottom access door

2
Installation

In This Chapter

This chapter covers the following topics:

- Verifying the Site Preparation
- Tools Required
- Unpacking the Shipment
- Installing the System Slides
- Turning the System On and Off
- Invoking Console Mode
- Connecting to Networks
- Connecting Peripherals

Before Installing the System

Warning

Only a qualified service person should install the system. A qualified service person is an individual who has the technical training and experience necessary to be aware of the:

- Hazards to which they are exposed in performing a task
- Measures to minimize the danger to themselves or other persons.

A qualified service person need not be a Digital service representative.

Verifying the Site Preparation

Overview

The installation instructions that follow assume that:

- All cables that you plan to connect to your system are in place and clearly labeled. These cables are:

  Terminal data cables
  Telephone cables
  Network cables

- The specifications and conditions listed in Appendix A have been met.
- The system is located in an area that provides sufficient clearance for ventilation and servicing. Figure 2–1 shows the recommended clearance for the system.

Caution

Do not impede airflow by obstructing the front and rear of the unit. Exceeding internal thermal limits can affect system reliability/availability.

Warning

The AlphaServer 2100 RM series system weighs 45.4 kg (100 lb). To prevent personal injury and equipment damage, ensure that the system is contained in an enclosure that can be stabilized when the system is pulled out on its slides.

Figure 2–1 System Clearance and Service Area

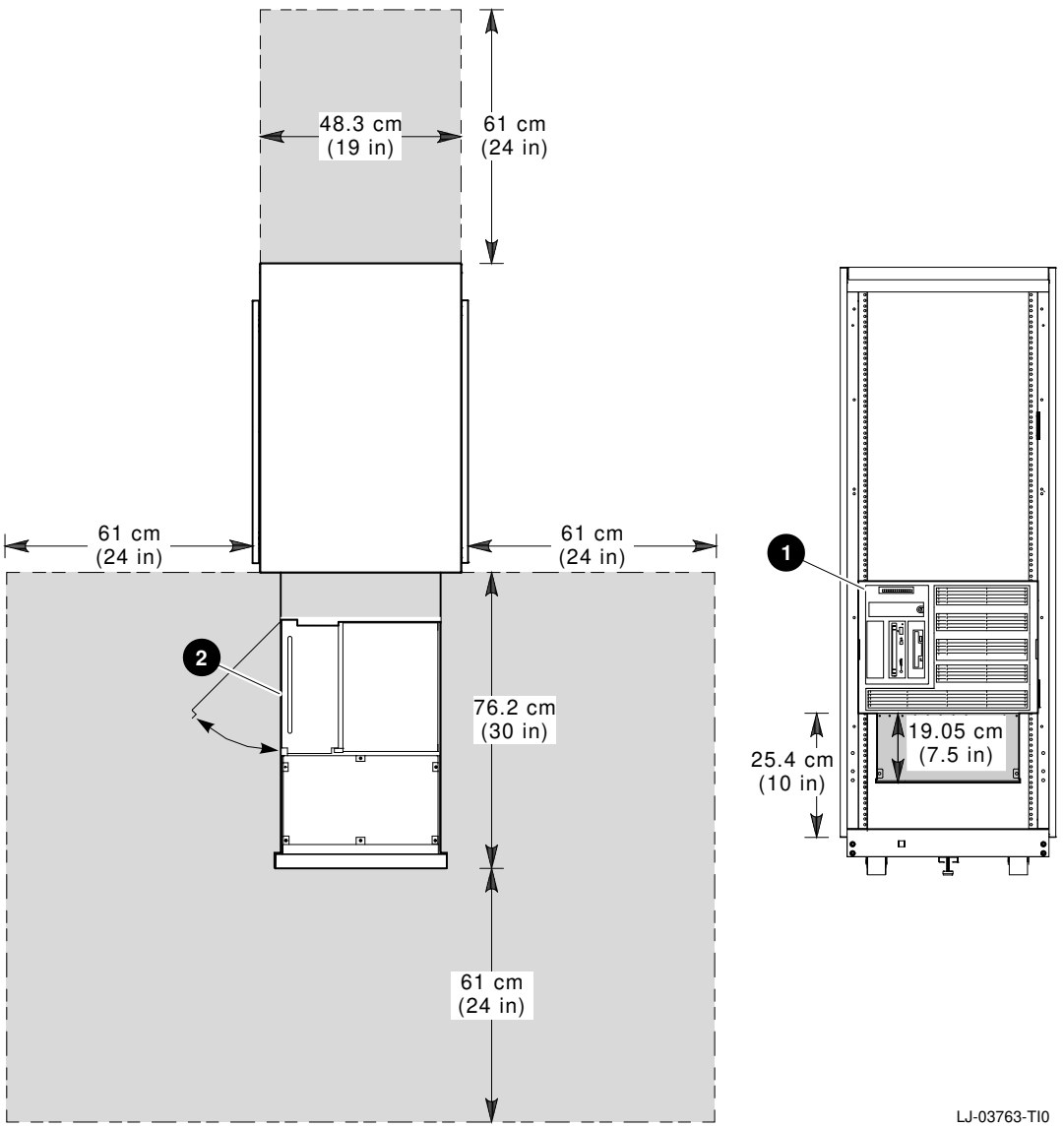

❶ Front bezel

❷ Top of unit

Power Requirements

Your system has either one or two power supplies, depending on your order. Figure 2–2 shows the power requirements for each system power supply.

Voltage selection is not required. This equipment is intended for use at all rated ac-input voltages.

Warning: High voltage shock hazard present inside the power supply.

Figure 2–2 Power Requirements

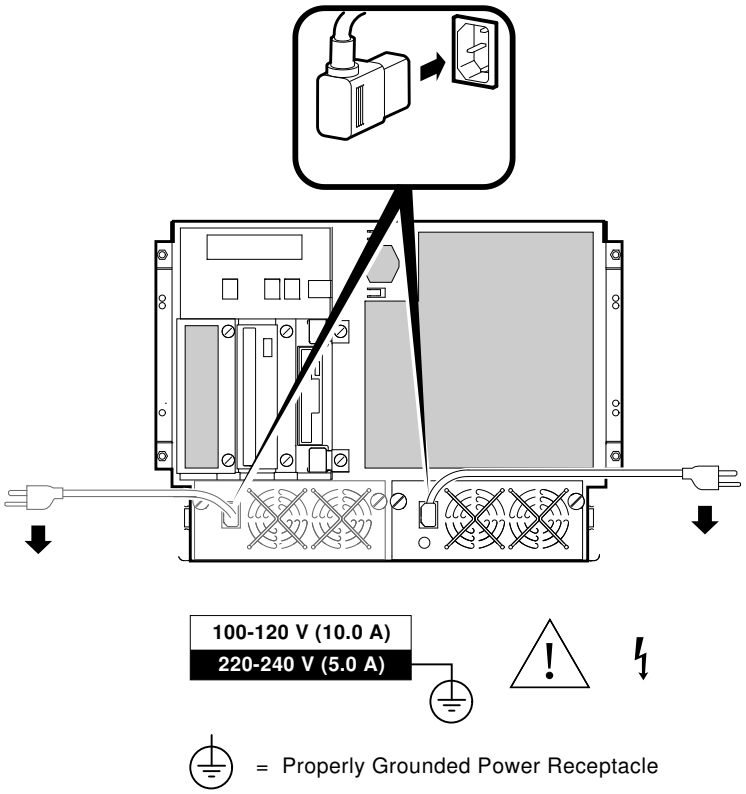

Power Cords

Power cords for the AlphaServer 2100 RM series system are country-specific. The system is shipped with a U.S. power cord (PN: 17-00083-51).

For a list of the available power cords and their appropriate part numbers, refer to Table 2–1 and note the following:

- If a customer, use the Power Cord BN Number to identify the power cord that you need.
- If a Digital service representative, use the Digital Number to identify the power cord that you need.

Note

One power cord is needed for each power supply in your system.

Table 2–1 Power Cord Order Numbers

Country	Power Cord BN Number	Digital Number
U.S., Japan, Canada [1]	—	17-00083-51
Australia, New Zealand	BN19J-2E	17-00198-13
Central European (Aus, Bel, Fra, Ger, Fin, Hol, Nor, Swe, Por, Spa)	BN19D-2E	17-00199-22
U.K., Ireland	BN19B-2E	17-00209-12
Switzerland	BN04B-2E	17-00210-12
Denmark	BN19L-2E	17-00310-06
Italy	BN19N-2E	17-00364-17
India, South Africa	BN19T-2E	17-00456-15
Israel	BN19Y-2E	17-00457-15

[1]This power cord is included with the system.

Tools Required

The tools required to install the rackmount system are:

- Scissors
- Flat-blade screwdriver
- Phillips screwdriver
- Adjustable wrench

Unpacking the Shipment

Checking the Shipment

Note

Save all packing materials in case you need to return the system for service or to reship the system.

Check the packing list to ensure that all items listed have been received. If any item is missing or damaged, contact your delivery agent immediately and notify your Digital sales representative.

Your shipment may include several cartons. One carton contains the system, hardware documentation, software documentation, system software, diagnostic software, and software licenses.

Depending on your order, your shipment may also include some of the following components:

- Terminals
- Printers
- Modems
- Options

Warning

The AlphaServer 2100 RM series system weighs 45.4 kg (100 lb). Use sufficient personnel to remove the system from the shipping carton.

Accessories

Table 2–2 lists the mounting hardware included with the system for installation in cabinets conforming to either English RETMA or metric RETMA standards.

Table 2–2 Accessory Kit Contents (PN: 70-31577-01)

Description	Part Number	Quantity
Rubber grommet	12-31734-01	8
SCSI terminator	12-37004-04	1
Ethernet loopback connector	12-22196-02	1
Serial line adapter	H8571-J	1
Power cord, term 3-14 SJT 125 V	17-00083-51	1
Chassis slide assembly	12-42522-01	1 pair
Drive plate	74-48242-01	1
Left slide bracket	74-48424-01	2
Right slide bracket	74-48424-02	2
Bar nut	74-48746-01	4
Cable management bracket (cabinet)	74-48881-01	1
Cable management bracket (system)	74-48882-01	1
Interlock actuator bracket	74-48999-01	1
Stabilizer bracket	74-48996-01	1
Actuator latch	74-48997-02	1
Stabilizer bracket nut plate	74-48998-01	1
Screw, 10-32 truss-head	90-00063-37	2
Set screw, 6-32	90-06291-10	2
Screw, 10-32 truss-head	90-00063-39	24
Cable tie, 1.25-inch diameter	90-07031-01	10
U-nut, 10-32 x 0.615L	90-07786-00	8
Key	90-11194-01	1
Pan-head machine screw, M4 x 10 mm	90-10556-01	14

(continued on next page)

Table 2–2 (Cont.) Accessory Kit Contents (PN: 70-31577-01)

Description	Part Number	Quantity
Flat-head machine screw, M3 x 6 mm	90-40122-03	4
Keyboard/Mouse extension cable kit	2T-450KM-AA	1
AlphaServer 2100 Customer Kit	QZ-00KAA-HC	1
AlphaServer 2100 RM Series Installation/Owner's Guide	EK-KN450-RM	1

Installing the System Slides

Overview

The rackmount system is shipped with one pair of slide assemblies (PN: 12-42522-01), which include:

- Four universal brackets for both English RETMA or metric RETMA cabinet installation
- Pair of slide assemblies
- Attaching hardware

Installing the system on the slides involves the following major steps:

1. Preparing the slides
2. Attaching the slide races
3. Attaching the slides to the cabinet rails
4. Mounting the system on the slides

Tools Required

A flat-blade screwdriver and a small adjustable wrench are needed to install the rackmount system.

Preparing the Slides

Refer to Figure 2–3 and prepare the slides as follows:

Caution

To avoid damaging the slides, it is important that the installation be performed as instructed in the following procedure.

Note

Unless noted otherwise, the following instructions apply to both English RETMA and metric RETMA cabinet installations.

1. Find the slide assembly ❶ labeled RH (for right-hand side) that is shipped with the system.
2. Pull out the inside race ❷ until it locks. *Do not* remove the race from the slide assembly at this time.
3. Orient the slide so that the arrow ❸ next to the locking lever ❹ is pointing upward.
4. For English RETMA cabinets, slide the E/LF-RR bracket ❺ onto the rear end of the slide assembly ❶ with the end stamped E facing away from the slide.

   For metric RETMA cabinets, use the same procedure as above, except slide the M/LF-RR bracket onto the rear end of the slide assembly with the end stamped M facing away from the slide.

Figure 2–3 Attaching the Brackets to the Right Slide Assembly (English RETMA)

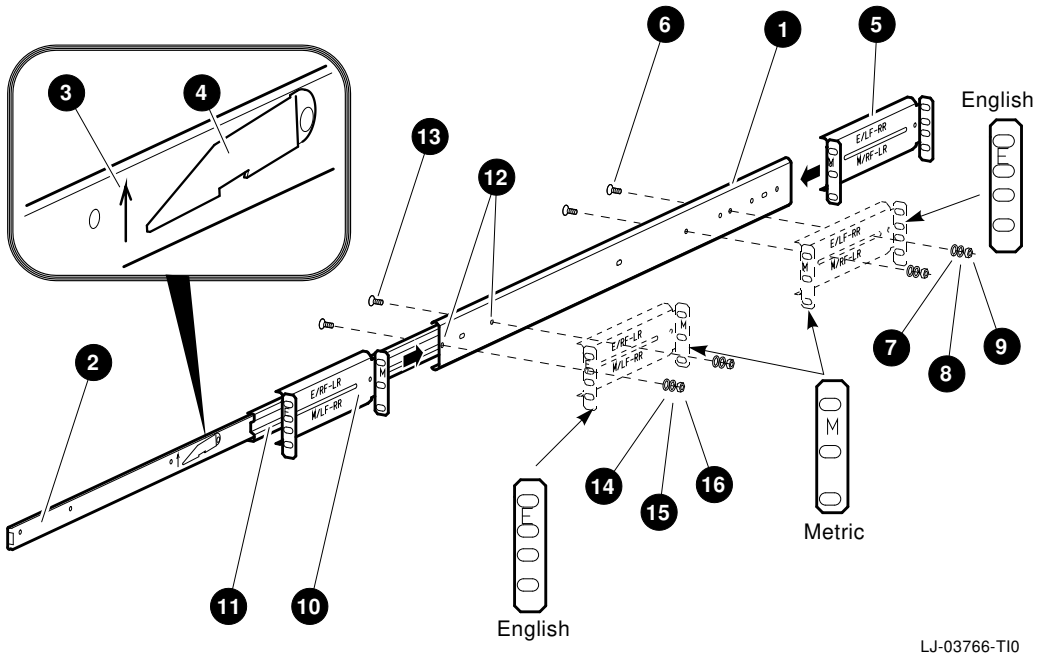

5. Attach the rear bracket ❺ to the slide assembly ❶ using the mounting holes shown in Figure 2–3 and two 8-32 screws ❻, flat washers ❼, lock washers ❽, and nuts ❾, but do not tighten. The bracket must be loose enough to adjust later.
6. Press up on the locking lever ❹ (direction of the arrow ❸), and pull the race ❷ out of the slide assembly ❶.
7. For English RETMA cabinets, slide the E/RF-LR bracket ❿ onto the front end of the slide assembly ❶ with the end stamped E facing away from the slide.

   For metric RETMA cabinets, use the same procedure as above, except slide the M/RF-LR bracket onto the front end of the slide assembly with the end stamped M facing away from the slide.
8. To fasten the front bracket to the slide assembly, proceed as follows:

   a. Pull out the inside slide ⓫ about halfway, enough to align two half-inch access holes on the inside slide with the mounting holes ⓬ on the slide assembly ❶ and the front bracket ❿. The first hole on the slide assembly aligns with the first hole on the bracket as shown in Figure 2–3.

   b. Attach the front bracket ❿ to the slide assembly ❶ using two 8-32 screws ⓭, flat washers ⓮, lock washers ⓯, and nuts ⓰. Tighten the screws.

   c. Slide the race ❷ back into the slide assembly, making sure that the arrow ❸ is pointing upward and the locking lever is pointing away from the slide assembly.

   d. Set this assembly aside.

9. Find the slide assembly labeled LH (for left-hand side) that is shipped with the system.

Caution

To avoid damaging the slides, it is important that the installation be performed as instructed in the procedure previously outlined in steps 2 through 8.

10. Attach the rear and front brackets (following steps 2 through 8) using the brackets as follows:
    - For English RETMA cabinet installation, use bracket E/RF-LR for the rear end of the slide assembly and bracket E/LF-RR for the front end of the slide assembly.
    - For metric RETMA cabinet installation, use bracket M/RF-LR for the rear end of the slide assembly and bracket M/LF-RR for the front end of the slide assembly.

Reminder

Figure 2–3 shows how to attach the front and rear brackets to a right slide assembly for an English RETMA cabinet. Use as reference only when assembling the left slide assembly.

Attaching the Slide Races

To attach the slide races, refer to Figure 2–4 and proceed as follows:

1. Remove the race from the slide assembly labeled RH.

Caution

When performing the next step, ensure that the arrow ❶ (shown in Figure 2–4) points upward and the locking lever ❷ points toward the front of the system. Otherwise, the slide will be damaged when the system is installed on the slides.

2. Attach the right slide race ❸ to the right side of the system chassis ❹ (as viewed from the front) using four pan-head screws ❺.
3. Remove the race from the slide assembly labeled LH.
4. Take note of the caution in step 1 and repeat step 2 to attach the left slide race to the left side of the system chassis.

Figure 2–4 Attaching the Slide Races

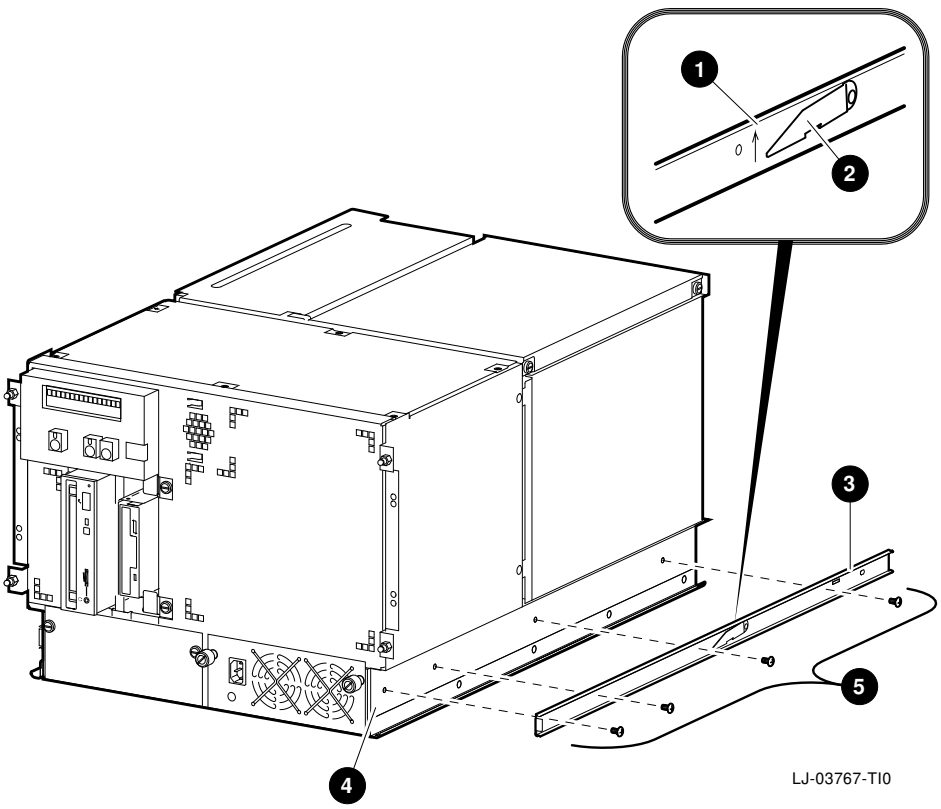

Attaching the Power Cords

To install the power cord, refer to Figure 2–5 and proceed as follows:

1. Attach the power cord ❶ to the right (facing the system) chassis tray ❷ using seven tie wraps ❸. Ensure that there is enough slack left in the power cord so that it can be plugged into the system ac connector ❹ later.

   Note

   At this time, leave the power cord disconnected from the system ac connector ❹. This connection serves as an ac power switch.

2. Coil the male plug end of the power cord ❺ and place it on top of the system to keep it out of the way.
3. If the system has a redundant power supply, repeat steps 1 and 2 to attach the power cord to the left (facing the system) chassis tray.

Figure 2–5 Attaching the Power Cord

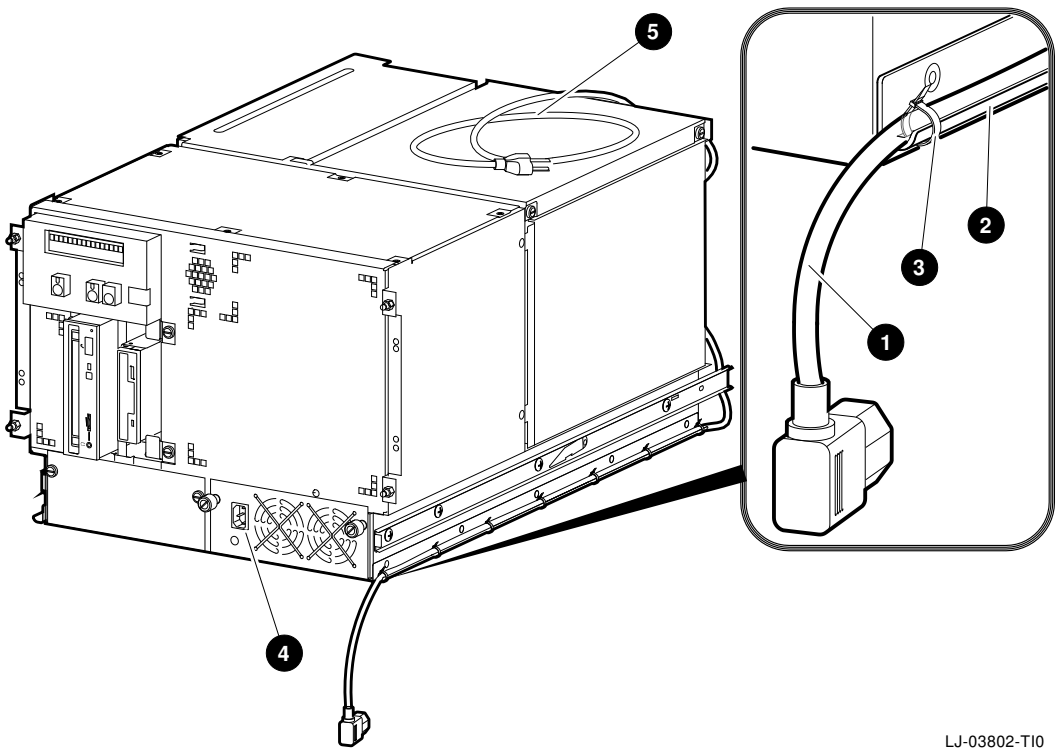

Cabinet Stability

Warning

To ensure cabinet stability, Digital does not recommend installing the system in the top area of the cabinet.

Cabinet Rail-Hole Pattern (English RETMA)

In a cabinet conforming to the English RETMA standard, the holes in the cabinet rails follow a pattern of 1.27 cm (0.50 in.), 1.59 cm (0.625 in.), and 1.59 cm (0.625 in.). This pattern is repeated for the length of the cabinet rails.

Determining the Installation Area (English RETMA)

To determine the installation area, perform the following steps at the front and rear cabinet rails (refer to Figure 2–6).

Step	Action
1	Select a section of the cabinet rail where there is a 1.27 cm (0.50 in.) space between two holes.
2	Make a mark between the holes. This is the starting point of the installation area.
3	Count up or down three holes. This is one *set* and equals 4.45 cm (1.75 in.).
4	Count up or down eight sets and make a mark. The area between the marks is the *installation area*.

The total installation area is 35.6 cm (14 in.). The equation for calculating the total installation area is:

4.45 cm (1.75 in.) $\times$ 8 sets = 35.6 cm (14 in.)

Note

The hole count described in this section determines the system installation location in any 35.6-cm (14-in.) area of the cabinet.

It is recommended that the system be installed a minimum of 43 cm (17 in.) from the floor to provide sufficient clearance for service through the bottom access door.

Figure 2–6 Installation Area and Mounting Holes (English RETMA)

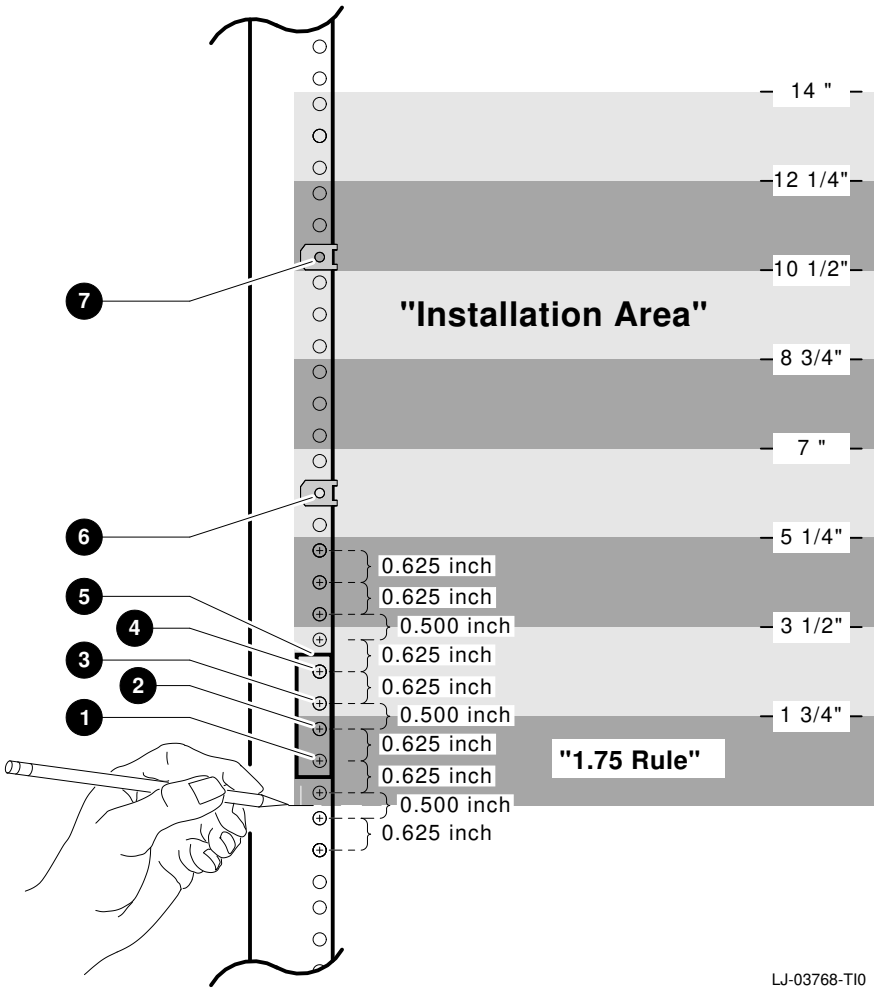

❶ Hole 2 for attaching slide bracket
❷ Hole 3 for attaching slide bracket
❸ Hole 4 for attaching slide bracket
❹ Hole 5 for attaching slide bracket
❺ Bar nut (placed behind rail (front and back rails))
❻ Hole 11 for clip nut used to secure system to front rails
❼ Hole 19 for clip nut used to secure system to front rails

Cabinet Rail-Hole Pattern (Metric RETMA)

In a cabinet conforming to the metric RETMA standard, the holes in the cabinet rails are 2.5 cm (0.98 in.) on center throughout the length of the cabinet rails.

Determining the Installation Area (Metric RETMA)

To determine the installation area, perform the following steps at the front and rear cabinet rails (refer to Figure 2–7).

Step	Action
1	Select a section of the cabinet rail where there are 14 consecutive holes unoccupied.
2	Make a mark between the first hole (bottom) and the one below it. This is the starting point of the installation area.
3	Count up 14 holes and make a mark halfway between the 14th and 15th hole. The area between the marks is the *installation area*.

The total installation area is 35 cm (13.78 in.). The equation for calculating the total installation area is:

2.5 cm (0.98 in.) $\times$ 14 holes = 35 cm (13.78 in.)

Note

The hole count described in this section determines the system installation location in any 35-cm (13.78-in.) area of the cabinet.

It is recommended that the system be installed a minimum of 43 cm (17 in.) from the floor to provide sufficient clearance for service through the bottom access door.

Figure 2–7 Installation Area and Mounting Holes (Metric RETMA)

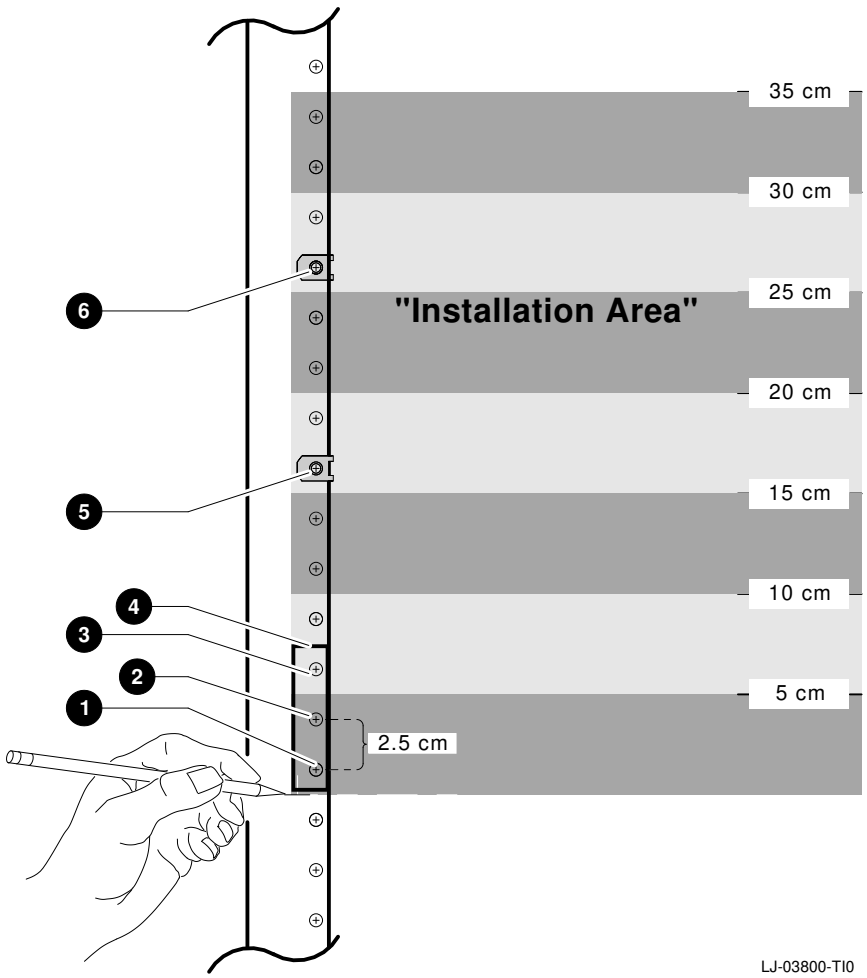

❶ Hole 1 for attaching slide bracket
❷ Hole 2 for attaching slide bracket
❸ Hole 3 for attaching slide bracket
❹ Bar nut (placed behind rail (front and back rails))
❺ Hole 7 for clip nut used to secure system to front rails
❻ Hole 11 for clip nut used to secure system to front rails

Installing the U-Nuts

Four U-nuts must be installed on the cabinet rails to receive the screws that secure the system to the rails. To install the U-nuts, proceed as follows:

1. In a cabinet with the English RETMA hole pattern, locate the 11th and 19th holes on the front rails in the installation area (refer to Figure 2–6). In a cabinet with the metric RETMA hole pattern, locate the 7th and 11th holes on the front rails in the installation area (refer to Figure 2–7).
2. Install a U-nut over each mounting hole identified in step 1 by sliding the U-nut over the edge of the cabinet rail and aligning it with the hole. Ensure that the threaded half of the U-nuts are toward the inside of the cabinet.

Attaching the Slides to the Cabinet Rails

To attach the slides to the cabinet rails, refer to Figure 2–8 and proceed as follows:

1. Locate the slide assembly labeled RH. In English RETMA cabinets attach the RH slide assembly ❶ to the right front cabinet rail ❷ (facing the front of the cabinet) using four 10-32 screws ❸ (for metric RETMA, use three screws) and bar nut ❹. Do not tighten the screws at this time.
2. Attach the RH slide assembly ❶ to the right rear cabinet rail ❺ using four 10-32 screws ❻ (for metric RETMA, use three screws) and bar nut ❼. Do not tighten the screws at this time.
3. Tighten the 8-32 screws attaching the rear bracket to the RH slide assembly (shown in Figure 2–3).
4. Repeat steps 1 through 3 to attach the LH slide assembly to the left cabinet rails.
5. Tighten the screws on the front and rear cabinet rails only enough to allow play for the slides to self-align when the system is installed in the next procedure.

Figure 2–8 Attaching the Slides to the Cabinet Rails

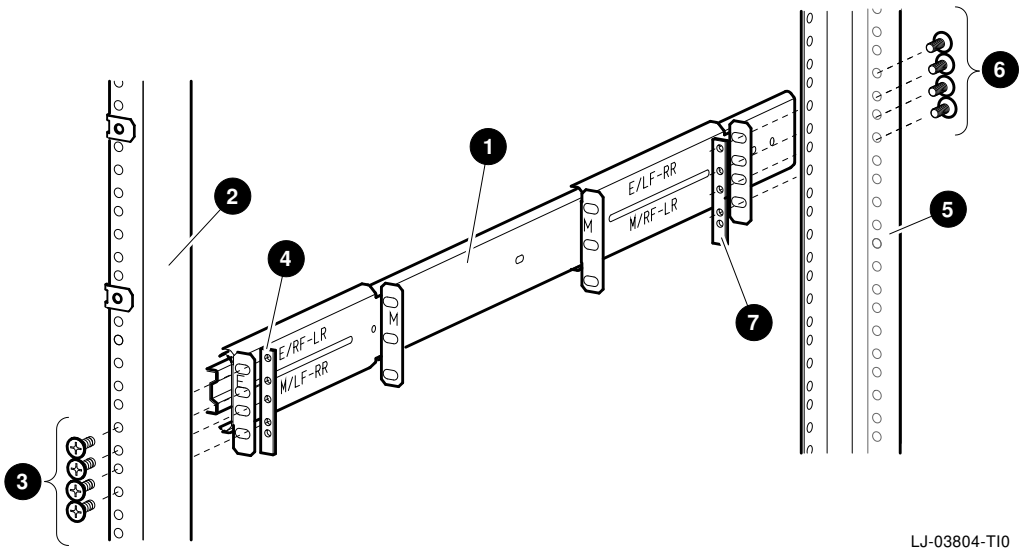

Mounting the System on the Slides

To mount the system on the slides, refer to Figure 2–9 and proceed as follows:

Warning

The fully-loaded AlphaServer 2100 RM series system weighs 45.4 kg (100 lb). Use sufficient personnel and the proper equipment when lifting or moving the rackmount system.

Stabilize the cabinet before installing the system into the cabinet. Figure 2–9 shows an example of a cabinet with the stabilizer foot ❶ extended.

1. Pull both equipment slides ❷ out fully to their locked positions.

Note

Coil the male plug end of the power cord ❺ and place it on top of the system to keep it out of the way when performing the next step.

2. Lift the chassis ❸ and position it so that the slide races fit into the front end of the slides.
3. Push the system into the slides until it stops. Push up on the two locking levers ❹, and then push the system into the cabinet.

Figure 2–9 Mounting the System on the Slides

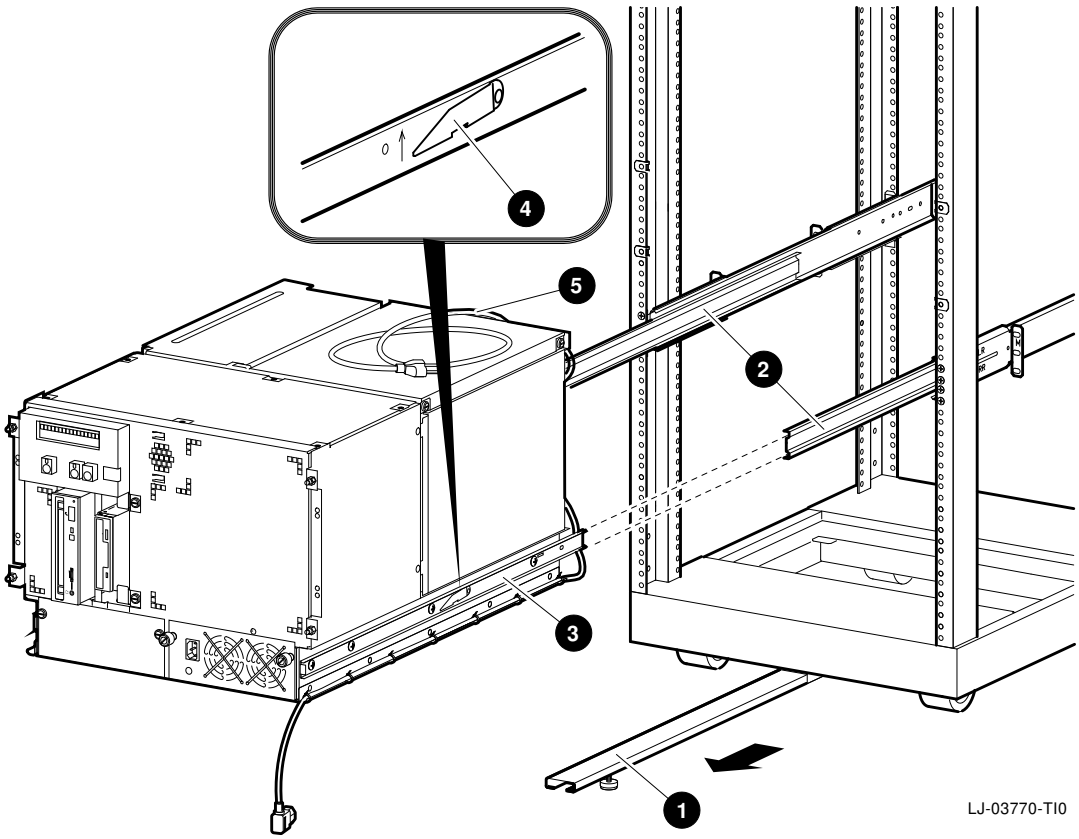

Aligning the System Slides to the Cabinet Rails

To align the system slides to the cabinet rails and ensure smooth operation in and out of the cabinet, refer to Figure 2–10 and proceed as follows:

1. Pull up on the front of the system and to secure the system to the front cabinet rails using four 10-32 screws ❶. The screws go through the system brackets and into the four U-nuts previously installed on the cabinet rails (refer to Figure 2–6 and Figure 2–7).
2. Securely tighten all the screws fastening the slides to the cabinet rails. These were installed earlier in the Attaching the Slides to the Cabinet Rails section (refer to Figure 2–8).

Figure 2–10 Aligning the System Slides to the Cabinet Rails

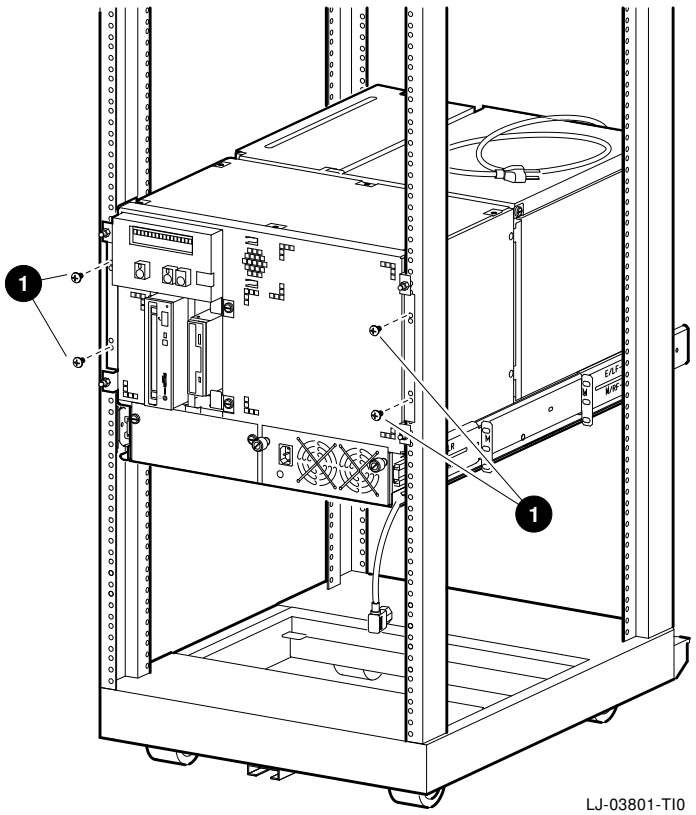

Using the Interlock System

The interlock system helps prevent cabinet instability by allowing only one system at any one time to be pulled out of the cabinet.

The interlock system consists of a vertical bar on which are mounted actuator latches for each product installed in the cabinet. These actuator latches engage the interlock actuator bracket on the rear of rackmount systems. When a rackmount system is pulled out of the cabinet, the actuator latches rotate to prevent any other rackmounted system that has an interlock actuator bracket from being pulled out of the cabinet.

Installing the Interlock Actuator Bracket

The interlock actuator bracket helps to prevent cabinet instability by allowing only one system at any one time to be pulled out of the cabinet. Install the interlock actuator bracket if the system cabinet has an interlock system.

Note

In some cabinets the interlock bar in the cabinet may not engage the interlock actuator bracket properly. In these cases, do not install the interlock actuator bracket.

Warning

If the system is installed in a cabinet without an interlock bar or the bar is not compatible with the system interlock actuator bracket, it is the customer's responsibility to provide a stable cabinet.

Figure 2–11 shows how to mount the interlock actuator bracket. Mount the interlock actuator bracket ❶ at the rear of the system ❷ using two M4 x 10 mm screws ❸.

Figure 2–11 Installing the Interlock Actuator Bracket

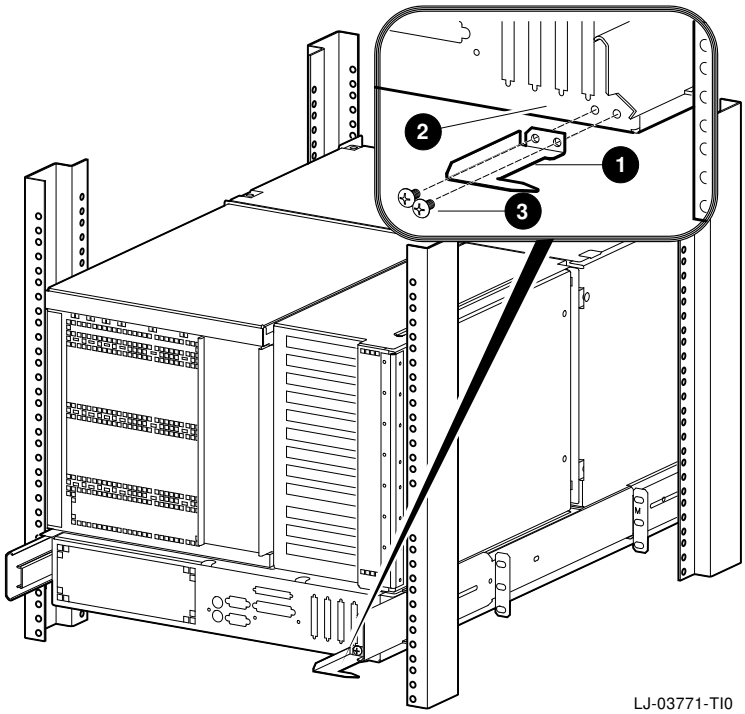

Installing the Interlock Actuator Latches

If additional products are installed into the cabinet, actuator latches for those products should be installed. To install actuator latches, refer to Figure 2–12 and proceed as follows:

1. Remove the screws securing the bottom mounting bracket to the cabinet ❹.
2. Slide the mounting bracket off the bottom of the vertical bar ❶.
3. Slide the stabilizer bracket ❺ for the new product onto the bottom of the vertical bar.
4. Slide the actuator latch ❷ for the new product onto the bottom of the vertical bar.
5. Replace the bottom mounting bracket ❹ and install the screws removed in step 1 but *do not* tighten them.
6. Position the stabilizer bracket so that the bottom hole in the stabilizer bracket ❻ aligns with the RETMA rail hole adjacent to the bottom of the installed product. This may require the loosening and sliding of other latches and stabilizer brackets to accommodate the new configuration.
7. Place the nut plate behind the RETMA rail and install and tighten the two 10-32 truss-head screws provided to secure the stabilizer bracket.
8. Position the new actuator latch ❷ to properly engage the interlock actuator bracket ❸, and tighten the two 6-32 set screws to secure the latch.
9. Now tighten the screws to secure the bottom mounting bracket ❹.

The expanded view (A) shows the position of the actuator latches when all systems are pushed into the cabinet. The expanded view (B) shows the position of all actuator latches after one system has been pulled out.

Note

The interlock system is compatible with the AlphaServer 2100 RM series systems. Other systems may not be compatible because the interlock actuator bracket may not engage properly. In these cases, do not install the interlock actuator bracket on those systems.

Warning

If a system is installed without an interlock actuator bracket or the vertical bar in the cabinet does not engage properly with the system interlock actuator bracket, it is the customer's responsibility to provide a stable cabinet.

Figure 2–12 The Interlock System

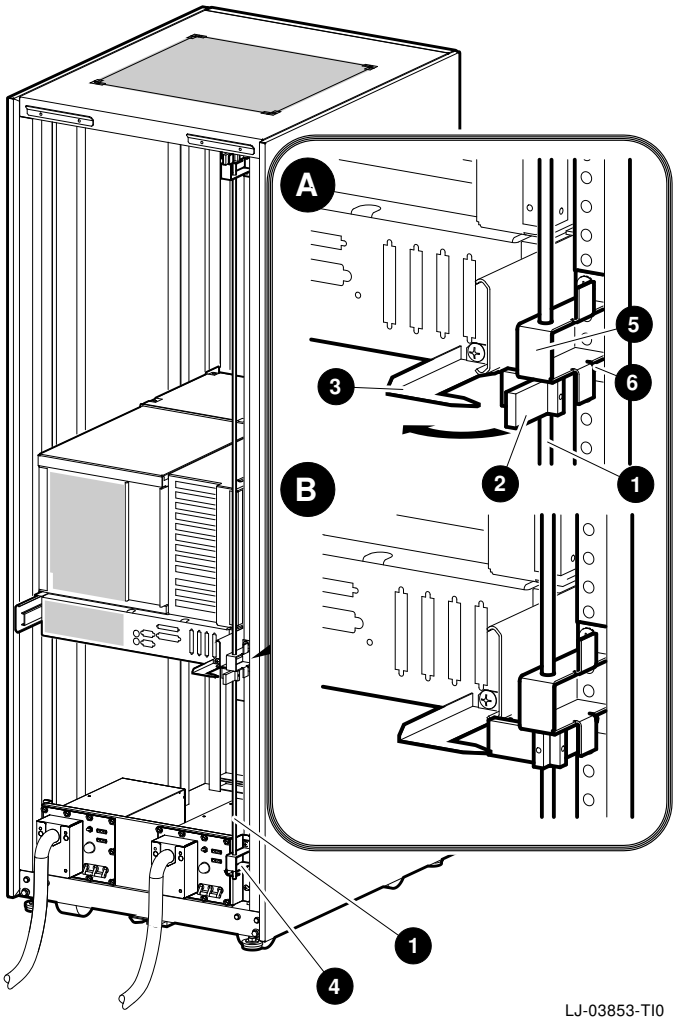

Installing the Cable Management System

The cable management system consists of two brackets (PN: 74-48882-01 and 74-48881-01) and cable tie wraps. When installed, the cable management system keeps the data cables and power cord(s) in place to prevent them from being damaged when the system is pulled out or pushed into the cabinet.

To install the cable management system, refer to Figure 2–13 and proceed as follows:

1. Slide the system into the cabinet.
2. Attach the system cable management bracket (PN: 74-48882-01) ❶ to the rear of the system using four M4 x 10 mm screws ❷.
3. In a cabinet with the English RETMA mounting hole pattern, locate the 12th and 15th rear cabinet rail mounting holes in the installation area established in the Determining the Installation Area (English RETMA) section (refer to Figure 2–6).

   In a cabinet with the metric RETMA mounting hole pattern, locate the 9th and 10th rear cabinet rail mounting holes in the installation area established in the Determining the Installation Area (Metric RETMA) section (refer to Figure 2–7).
4. Slide four U-nuts ❸ over the appropriate holes for a cabinet with the English RETMA or metric RETMA rail-hole pattern.
5. Attach the cabinet cable management bracket (PN: 74-48881-01) ❹ to the rear cabinet rails using four 10-32 truss-head screws ❺.

Figure 2–13 Installing the Cable Management Brackets

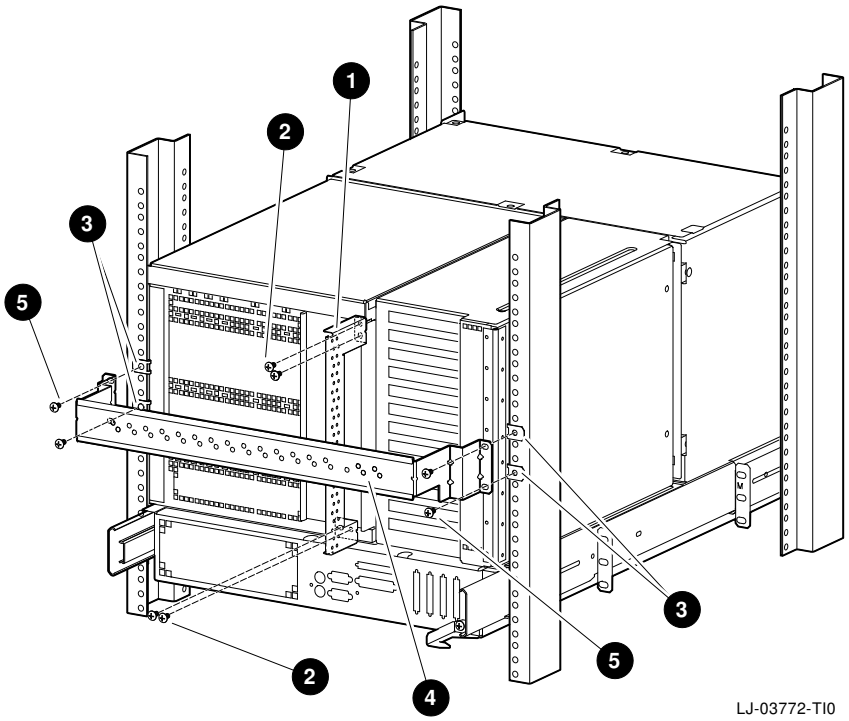

Cable Management: Cable Routing Guidelines

When routing the data cables and power cord(s) from the system to other devices, use the following guidelines:

1. Route the data cables from the system rear ports up the system cable management bracket on the rear of the system and secure them to the bracket using cable tie wraps. There are holes in the bracket for this purpose.

   Refer to Figure 2–14 for an example of how a data cable connected to the SCSI port and a power cord would be attached and routed using the two cable management brackets.

   Warning

   To prevent any equipment damage and possible injury, ensure that the cabinet is stabilized before pulling the system out of the cabinet.

2. Pull the system out of the cabinet to the full travel of the slides.
3. Route the data cables over the top of the cabinet cable management bracket. Attach these data cables along the outside of the cabinet cable management bracket using cable tie wraps (refer to Figure 2–14).

   Ensure that there is enough slack in the data cables to prevent stress (pulling) where the data cables are attached to the two cable management brackets.
4. Attach the power cord(s) to the cabinet cable management bracket using cable tie wraps (refer to Figure 2–14).

   Ensure that there is enough slack in the power cord(s) to prevent stress (pulling) where the power cord(s) are attached to the two cable management brackets.
5. Route the data cables and power cord(s) to the appropriate equipment for connection. The routing of these data cables and power cord(s) is dependent on the location of the power source and the network, peripheral, and terminal connections described at the end of this chapter.

Figure 2–14 Example of Cable Routing

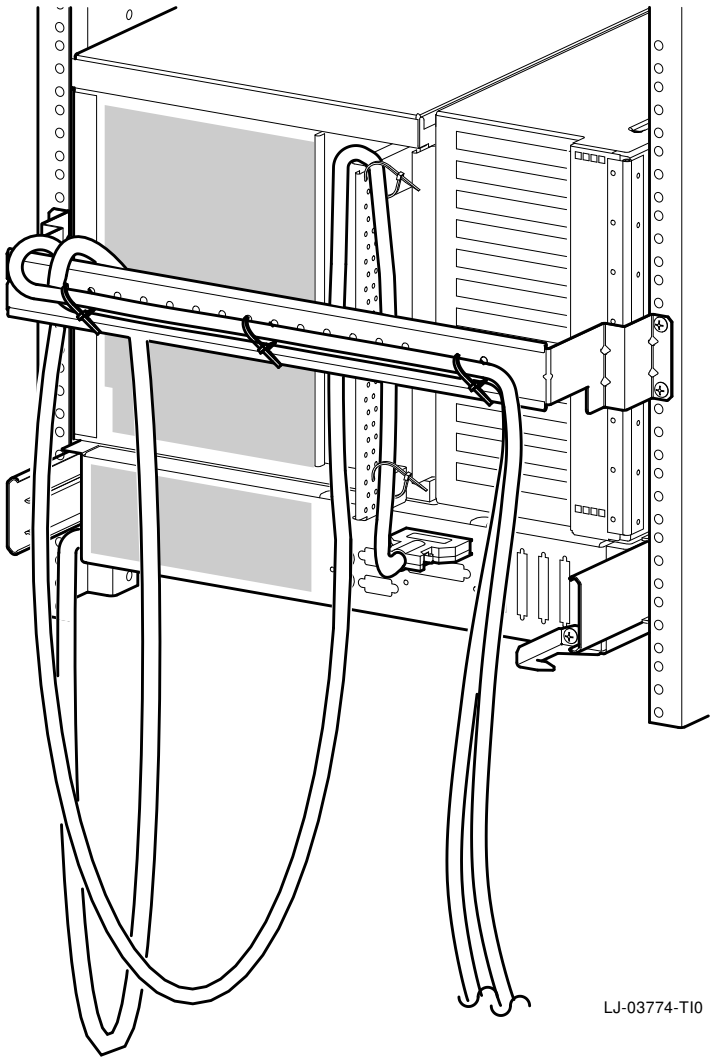

Installing Keyboard/Mouse Extension Cables

The two 5 m (16.4 ft) keyboard/mouse extension cables are used with AlphaServer 2100 RM series systems to extend the keyboard and mouse cables, and to allow the keyboard and mouse to be located *outside* the system equipment cabinet.

Use Figure 2–15 and the following procedure to install the keyboard/mouse extension cables:

1. Open the rear door of the equipment cabinet to access the rear of the rackmount AlphaServer 2100 chassis.
2. Connect the male end of one of the extension cables to the keyboard connector ❶ on the rear of the rackmount AlphaServer 2100 chassis.
3. Route this extension cable to the cable management bracket ❷ on the rear of the rackmount AlphaServer 2100 chassis and secure it to the bracket using cable tie wraps.
4. Route this extension cable to the cabinet cable management bracket ❸ and secure it along the outside of the bracket using cable tie wraps.

Caution

Ensure that there is enough slack in the extension cable to prevent stress (pulling) where the extension cable is attached to the two cable management brackets when the chassis is fully extended on the slides.

5. Route this extension cable down and out through the cable egress area located at the bottom rear of the equipment cabinet.
6. Connect the female end of the keyboard extension cable ❹ to the keyboard cable ❺.
7. Connect the male end of the other extension cable to the mouse connector ❻ on the rear of the rackmount AlphaServer 2100 chassis.
8. Route this extension cable to the cable management bracket ❷ on the rear of the rackmount AlphaServer 2100 chassis and secure it to the bracket using cable tie wraps.

9. Route this extension cable to the cabinet cable management bracket ❸ and secure it along the outside of the bracket using cable tie wraps.

Caution

Ensure that there is enough slack in the extension cable to prevent stress (pulling) where the extension cable is attached to the two cable management brackets when the chassis is fully extended on the slides.

10. Route this extension cable down and out through the cable egress area located at the bottom rear of the equipment cabinet.
11. Connect the female end of the mouse extension cable ❼ to the mouse cable ❽.
12. Close the rear door of the equipment cabinet.

Figure 2–15 Installing the Keyboard/Mouse Extension Cables

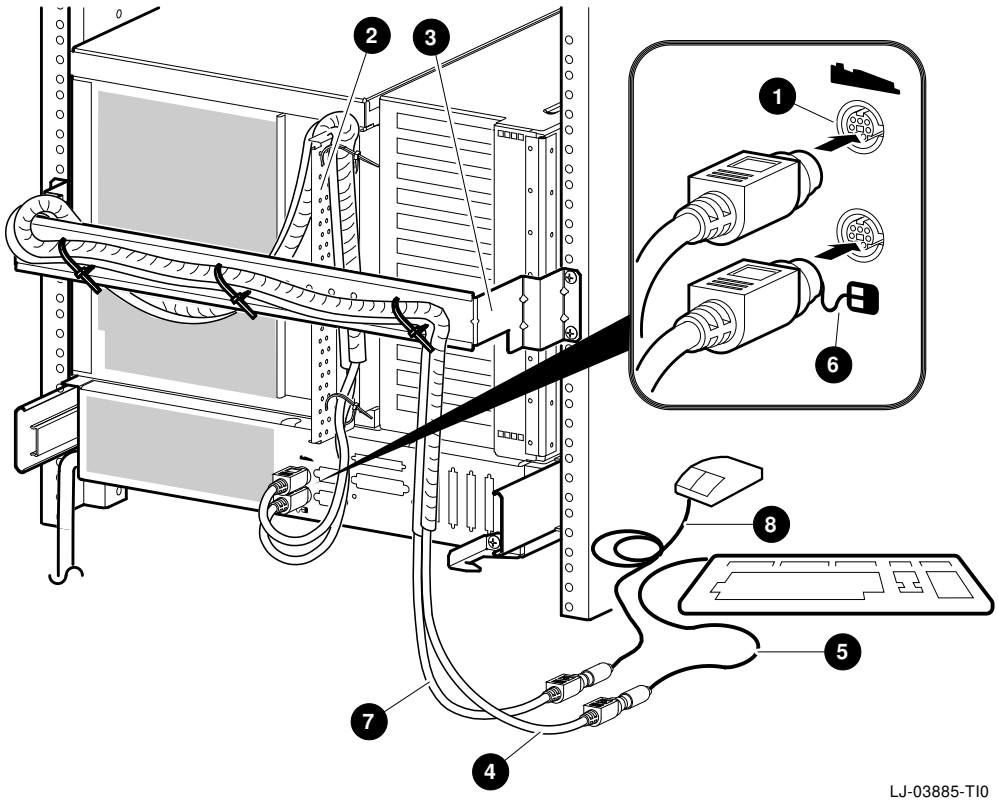

Expanding the System

The AlphaServer 2100 RM series system can be expanded from SCSI port E ❶ by removing the SCSI terminator (1) and connecting the appropriate cable (2) from the SCSI device connector (refer to Figure 2–16).

Locations ❷ for optional ports (A through D) are available for the RAID options and/or the DSSI options.

Figure 2–16 SCSI Expansion and Optional RAID and/or DSSI Ports

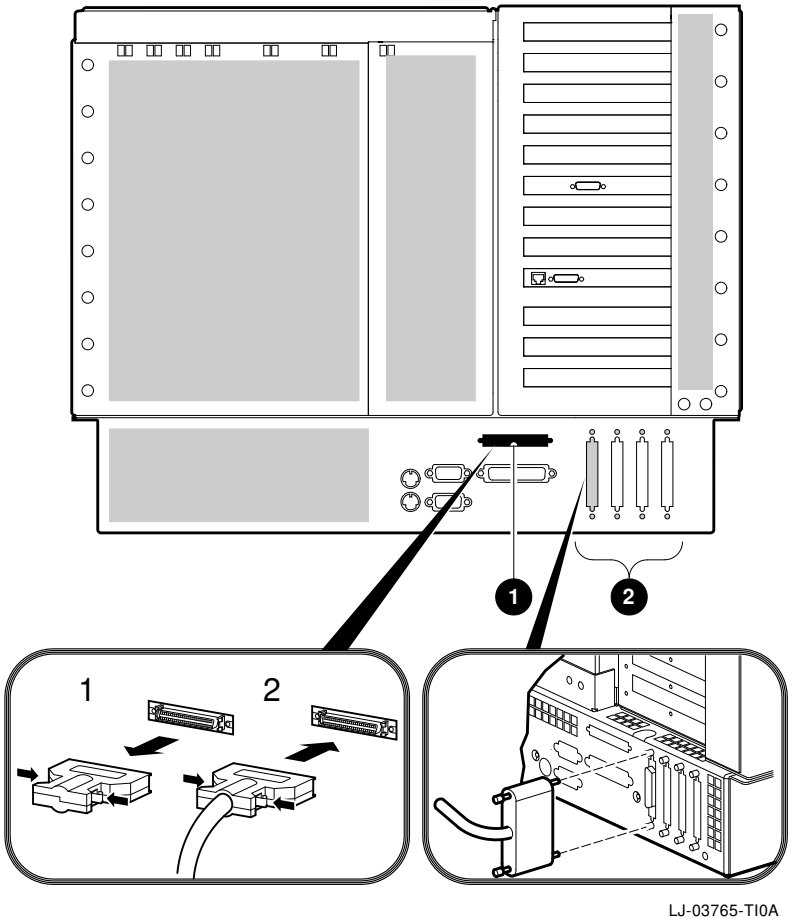

❶ Port E, SCSI expansion port

❷ Optional port locations (A through D) for RAID options and/or DSSI options

Turning the System On

Overview

Turning on the system involves the following major steps:

1. Checking the system settings
2. Applying power to the system
3. Checking the diagnostic indicators
4. Booting the operating system

Before You Begin

To perform some of the instructions in this procedure, the OCP door will need to be opened. The key used to lock and unlock the OCP door is shipped with the system in the system accessories carton. The keylock on the front of the system is shown in Figure 1–4.

Checking the System Settings

Before turning the system on, ensure that the system buttons are in the positions shown in Figure 2–17.

Figure 2–17 Powered-Down System Settings

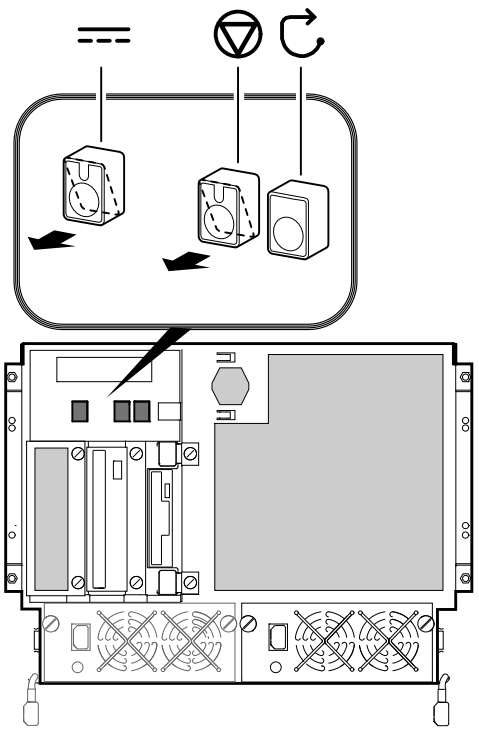

Connecting the Terminal

Connect either a Video Graphics Array (VGA) monitor or a Digital VT–series terminal (VT*xxx*) to the system as shown in Figure 2–18. Refer to the documentation that is shipped with the terminal for information on how to connect the keyboard and set up the terminal. Ensure that the VT–series terminal is set to 9600 baud.

Note

Digital VT–series terminal (VT*xxx*) requires an H8571-J serial adapter that is included with every system.

Figure 2–18 Connecting the Terminal

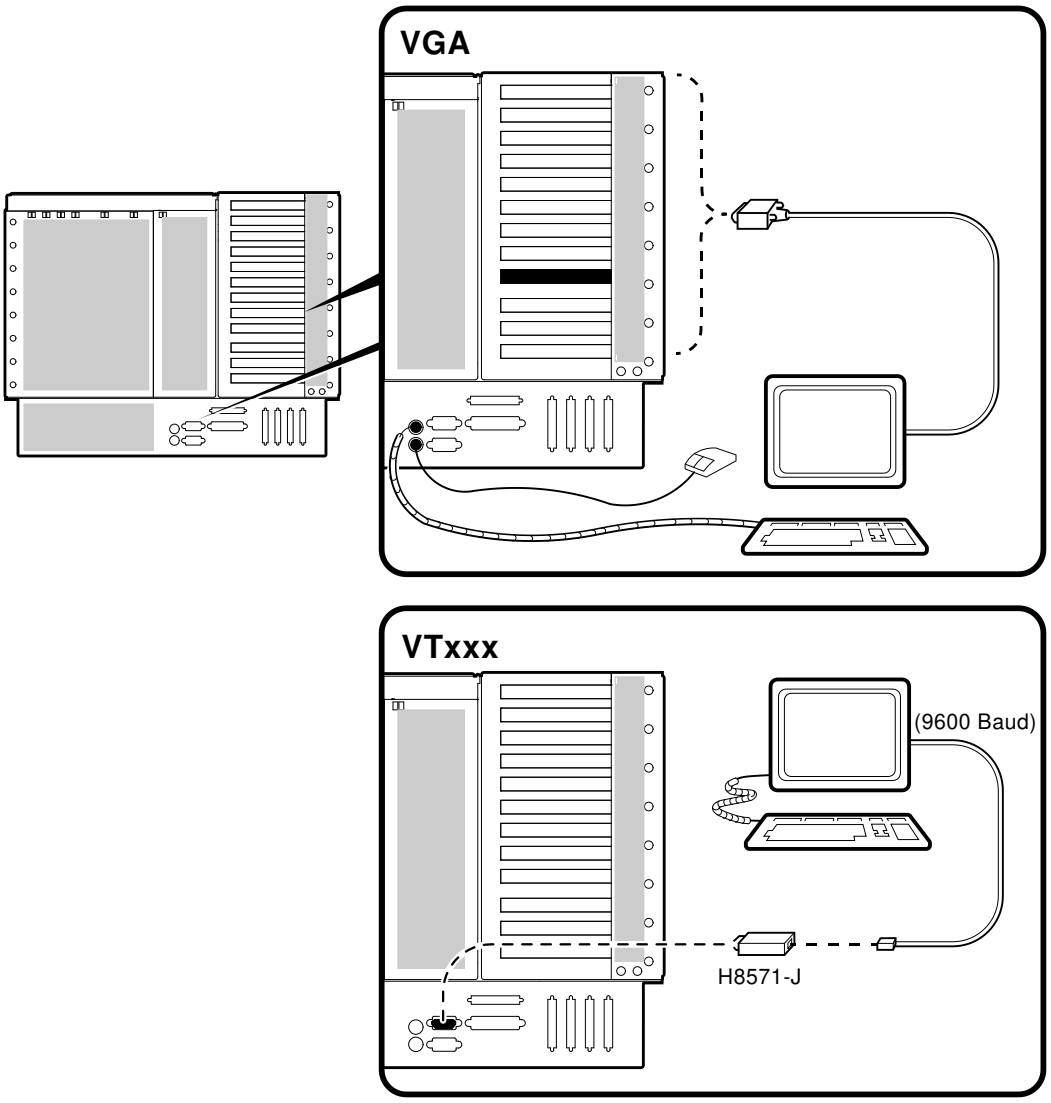

Applying Power to the System

Note

If there are any external expansion boxes (for example, expansion boxes that house storage devices) connected to the system, turn the power on to those devices first before applying power to the system.

Apply power to the system as shown in callouts ❶ through ❹ in Figure 2–19.

Figure 2–19 Applying Power to the System

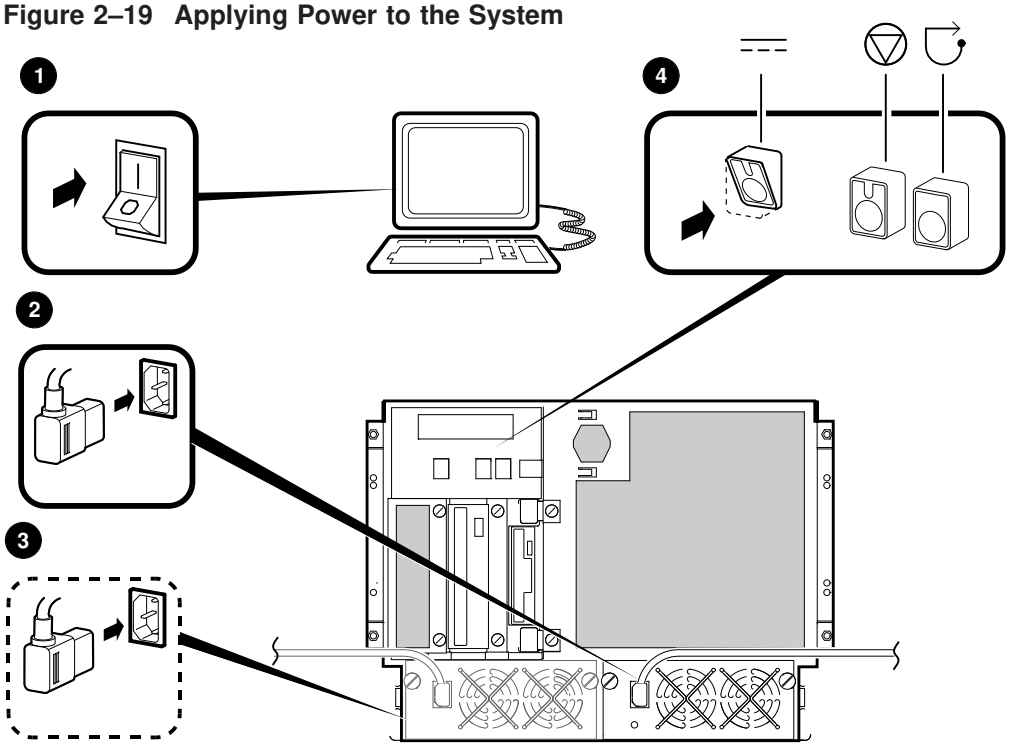

Checking the Diagnostic Indicators

After the system is turned on, check the status of three diagnostic indicators (refer to Figure 2–20): the power-up /diagnostic display ❶ on the operator control panel, the system startup screen ❷, and the console prompt ❸ (DEC OSF/1 or OpenVMS systems) or Main menu (Windows NT systems).

If any of the diagnostic indicators do not appear as described, refer to Chapter 5 for help.

Figure 2–20 System Startup Diagnostic Indicators

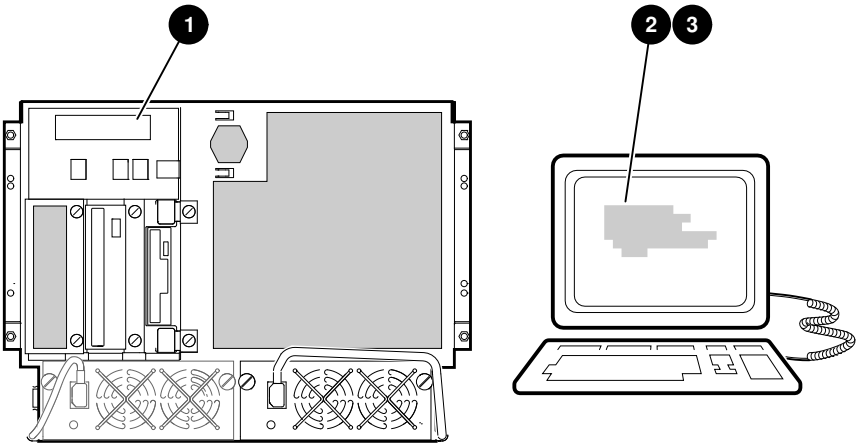

Power-Up/Diagnostic Display

The power-up/diagnostic display will display the following message for several seconds:

```
starting console
```

Once the system has completed self-tests, the power-up /diagnostic display will display the value of the ocp_text environment variable (default value is ‘‘Alpha AXP xx MHz’’). For information about changing the value of the ocp_text environment variable, refer to the ‘‘set ocp_text’’ section in Chapter 4 in the *AlphaServer 2100 Series Owner’s Guide*.

System Startup Screen

The system startup screen will scroll. To stop the screen display from scrolling, enter Ctrl/S. To resume scrolling, enter Ctrl/Q. To display any error messages that may have scrolled by, enter the `cat el` command.

The screen will look similar to the following example:

```
starting console on CPU 0
Testing Memory bank 0
Testing Memory bank 1
probing hose 0, PCI
slot 0 -- ewa -- DECchip 21040-AA
slot 1 -- pka -- NCR 53C810
slot 2 --     -- Intel 82375EB
probing hose 1, EISA
slot 2 -- pkb -- ADP0001
slot 3 -- era -- DEC4220
slot 4 -- dra -- MLX0070
probing hose 2, PCI
starting console on CPU 1
 2:35:54  March 4, 1994
 Memory Testing and Configuration Status
 Module   Size    Base Addr   Intlv Mode  Intlv Unit  Status
 ------   -----   ---------   ----------  ----------  ------
   0       64MB   00000000      1-Way         0       Passed
   1                                                  Not Installed
   2                                                  Not Installed
   3                                                  Not Installed
Total Bad Pages 0
Testing the System
No Disks available for testing
Testing the Network
Alpha AXP (TM) Server Console T3.5-12, built on Mar  1 1994 at
18:20:28
```

Console Prompt or Main Menu

The appropriate response on your console terminal depends on the operating system that you plan to boot.

Note

If neither a console system prompt or a Main menu is displayed, press Return several times.

DEC OSF/1 or OpenVMS Systems

DEC OSF/1 and OpenVMS systems are supported by the SRM firmware. Refer to Chapter 4 in the *AlphaServer 2100 Series Owner's Guide* for an overview of the console subsystem.

If booting DEC OSF/1 or OpenVMS systems, the console prompt for the SRM firmware should be displayed. The prompt will vary depending on how many CPUs are in your system:

```
>>> (1 CPU)
P00>>> (multiple CPUs)
```

Windows NT Systems

Windows NT systems are supported by the ARC firmware. Refer to Chapter 5 in the *AlphaServer 2100 Series Owner's Guide* for an overview of the console subsystem.

If booting Windows NT systems, the following screen should be displayed:

Example 2–1 Boot Menu Example

```
ARC Multiboot Alpha AXP Version n.nn
Copyright (c) 1993 Microsoft Corporation
Copyright (c) 1993  Digital Equipment Corporation

Boot menu:

   Boot Windows NT
   Boot an alternate operating system
   Run a program
   Supplementary menu...

Use the arrow keys to select, then press Enter.
```

Note

If the response on your terminal does not correspond to the operating system that you plan to boot, you are using the wrong console interface for your operating system. Switch to the other console as described in the following information.

Switching from SRM to ARC

To switch from the SRM console interface to the ARC console interface, enter the `arc` command as follows:

```
>>> arc
```

Once the console firmware is loaded and the system is initialized, the first screen of the ARC console interface is displayed.

Switching from ARC to SRM

To switch from the ARC console interface to the SRM console interface, perform the following steps:

1. From the Boot menu, select the Supplementary menu.
2. From the Supplementary menu, select `Set up the system`.
3. From the Setup menu, select `Switch to OpenVMS or OSF console`. The operating system console can be selected.
4. Select the operating system and press Enter on `Setup menu`.
5. When the message `Power-cycle the system to implement the change` displays, press the Reset button. (Do not press the DC On/Off button.)

Once the console firmware is loaded and the system is initialized, the SRM console interface prompt is displayed.

Preboot Tasks

You may need to perform some of the following tasks before booting your operating system:

- Run the EISA Configuration Utility.
- Check the required environment variable settings.
- Change the way your system powers up or boots.
- Verify your configuration.

The remainder of this section contains more information about each of these tasks.

Run the EISA Configuration Utility

If an EISA or ISA module has been added, removed, or moved, the EISA Configuration Utility must be run before booting the operating system. Refer to the EISA Bus Options section in Chapter 4.

Check the Required Environment Variable Settings—DEC OSF/1 or OpenVMS

If running DEC OSF/1 or OpenVMS, check that the settings for the following environment variables match your configuration. The console command to reset the variable is shown in parentheses. Refer to Chapter 4 in the *AlphaServer 2100 Series Owner's Guide*.

- Operating system (`set os_type`)
- Ethernet device type (`set ew*0_mode`)
- Speed for Fast SCSI devices (`set pk*0_fast`)
- Boot device (`set bootdef_dev`)
- Boot flags (`set boot_osflags`)

Reminder

Except for the `set bootdef_dev` and the `set boot_osflags` commands, the environment variables are set by initializing the system before booting the operating system. The system can be initialized either by entering the `init` command at the `>>>` prompt or by pressing the Reset button on the OCP.

Change Default Power-up or Bootstrap

To change the way the system powers up or boots the operating system, change the default values for your system's environment variables. Typical changes would be to set the system to autoboot or to change the default boot device.

- For DEC OSF/1 or OpenVMS systems, review Chapter 4 in the *AlphaServer 2100 Series Owner's Guide*, particularly Table 4-1 and Table 4-2. Also see the console command pages in that chapter.
- Windows NT systems boot automatically. To prevent autoboot, select one of the menu options. Review Chapter 5 and Chapter 6 in the *AlphaServer 2100 Series Owner's Guide*.

Verify Your Configuration

- DEC OSF/1 or OpenVMS systems

  The following SRM console commands are used to verify system configuration on systems running either the DEC OSF/1 or OpenVMS operating system:

  - `show config` (show_config)—Displays the buses on the system and the devices found on those buses.
  - `show device` (show_device)—Displays the devices and controllers in the system.
  - `show memory` (sho_mem)—Displays main memory configuration.
  - `set` and `show` (setting and showing environmental variables)—Set and display environment variable settings.

  For more information about these console commands, refer to Chapter 4.

- Windows NT systems

  The following ARC menu options are used to verify system configuration on systems running the Windows NT operating system:

  - `Available Hardware Devices Display`—Lists the ARC boot devices names for devices installed in the system.
  - `Set Default Variables`—Allows you to select values for Windows NT firmware environment variables.

  For more information about these menu options, refer to Chapter 5 in the *AlphaServer 2100 Series Owner's Guide*.

Switching Between Operating Systems

Because configuration files are different for each operating system, you must perform the following tasks to switch from one operating system to another on your system:

1. Invoke console mode if you are not already in console mode.

   For information about invoking console mode, refer to the Invoking Console Mode section presented later in this chapter.

2. Insert the System Configuration Diskette for the operating system that you are going to switch to.

3. Run the EISA Configuration Utility (ECU) from that diskette.

   For information about running the ECU, refer to the Configuring EISA Options section in Chapter 4.

4. Remove the ECU diskette.

5. Switch operating systems by following the procedure described in the Console Firmware Overview section in either Chapter 4 or Chapter 5 in the *AlphaServer 2100 Series Owner's Guide*.

Booting the Operating System

One of several operating systems can be booted:

- DEC OSF/1
- OpenVMS
- Windows NT

In the following instructions, it is assumed that the operating system has already been booted at least once.

Condition	Reference
If Factory Installed Software (FIS) has not been booted	See the Factory Installed Software document that came with your system.
If the system was not shipped with Factory Installed Software, and the operating system software has not been loaded or booted	See the installation documentation that came with your operating system.

Booting DEC OSF/1 or OpenVMS Software

When booting either DEC OSF/1 or OpenVMS systems, the console prompt >>> should be displayed. Boot the operating system as follows:

Step	Action
1	Enter `boot` or `b` at the console prompt. `>>> b` The system boots the operating system using the default values for the boot device and boot flags. A ''booting system software'' screen is displayed on the console terminal. After several minutes, the operating system login banner is displayed on the console terminal.
2	Log in at the login prompt. Once the operating system prompt is displayed, the system is ready for normal operation.

For complete information about the `boot` command, refer to the ''boot'' section in Chapter 4 in the *AlphaServer 2100 Series Owner's Guide*.

Booting Windows NT Software

When booting a Windows NT system, the Windows NT menu should be displayed (refer to Example 2–1).

Windows NT will automatically begin booting after the Main menu is displayed for several seconds.

Autobooting the Operating System

If the system is set to autoboot, the operating system will automatically boot after you power up the system, press the Reset button, or after recovery from a system crash.

To autoboot DEC OSF/1 or OpenVMS systems:

- Set the `auto_action` environment variable to either ''boot'' or ''restart''. For more information, refer to the `set auto_action` command in Chapter 4 in the *AlphaServer 2100 Series Owner's Guide*.
- Ensure that the default boot device has been set to the device from which you want the operating system to boot. (Enter `show bootdef_dev` to see whether your default boot device has already been assigned.) For information about setting the default boot device, refer to the `set bootdef_dev` command in Chapter 4 in the *AlphaServer 2100 Series Owner's Guide*.

Note

The Windows NT operating system will always autoboot.

Turning the System Off

Before You Begin

It may not be necessary to turn the system off to recover from system problems. Recovery from hangs or other minor problems are often solved by pressing the Reset button on the OCP. For maximum reliability, Digital recommends minimizing the number of times that the system is turned on or off.

Turning Off the DC Power

If the system needs to be turned off, proceed as follows:

1. Shut down the operating system according to the operating system shutdown procedure described in your operating system documentation.
2. Press the DC On/Off button and the Halt button to the positions shown in Figure 2–21. (If the Halt button is set to the in position, the system will not boot the next time the system is turned on.)

Turning the System Off

Figure 2–21 Turning Off the System

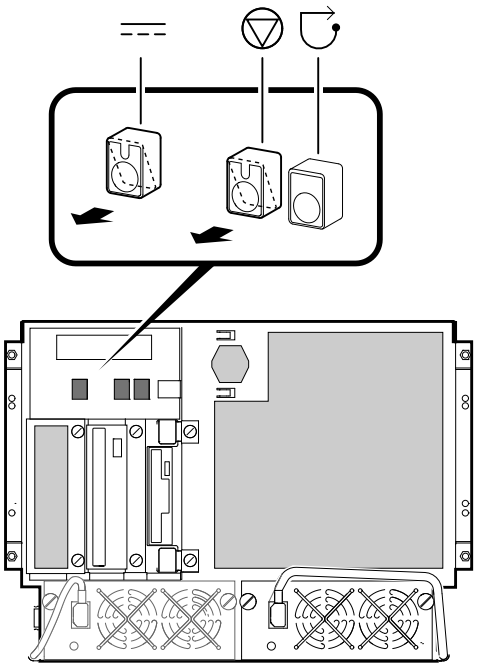

LJ-03777-TI0

Extended Power-Down (AC Power)

If an extended power-down is required, proceed as follows:

1. Turn off the dc power to the system as described in the previous section.
2. Turn off the ac power to the system by unplugging the ac power cord(s) as shown in Figure 2–22.

Warning

If two power supplies are present, unplug the ac power cord(s) from each power supply.

Figure 2–22 Turning Off the AC Power

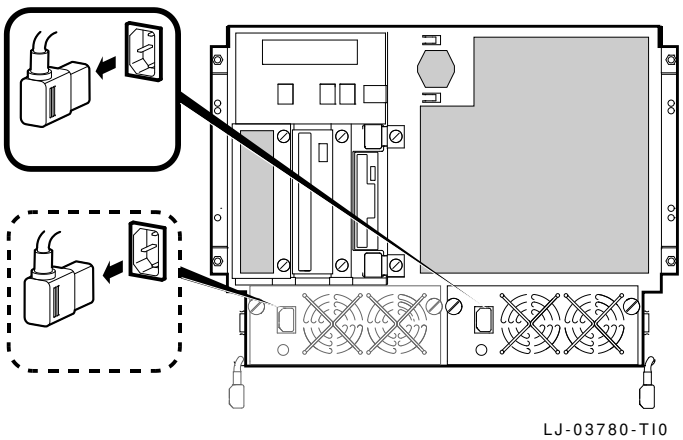

Invoking Console Mode

Console Subsystem

On Alpha AXP systems, underlying control of the system platform hardware is provided by a console subsystem. The console subsystem contains firmware code (software code embedded in the hardware) that offers service functions such as initializing and testing the hardware and bootstrapping the system software. Because the AlphaServer 2100 system supports multiple operating systems, the server has two different versions of console firmware. They are explained in detail in Chapter 4 (for users running DEC OSF/1 or OpenVMS) and Chapter 5 (for users running Windows NT) in the *AlphaServer 2100 Series Owner's Guide*.

Console Terminal

A console terminal is *required* for your system. It allows the issuing of commands to the system while the operating system is not running.

Console Mode

Console mode is the state in which the system and the console terminal operate under the control of the console firmware. When commands can be issued from the console terminal and firmware is executing, the system is in the console mode.

On DEC OSF/1 and OpenVMS systems, the console mode prompt for a system with one CPU is >>>. The console mode prompt for a system with multiple CPUs is `P00`>>>. The control characters and supported keys can be used to enter console commands at the console mode prompt.

Invoking Console Mode

Invoke console mode by shutting down the operating system according to the operating system shutdown procedure described in your operating system documentation.

Using the Halt Button

If running DEC OSF/1 or OpenVMS, the console mode can be invoked by pressing the Halt button on the operator control panel. However, ensure that the operating system is shut down first.

Caution

Press the Halt button only after the operating system has been shut down using the proper software shutdown procedure.

Pressing the Halt button has no effect if you are running Windows NT.

For more information about using the Halt button, refer to Figure 3–1.

Remote Access

When running DEC OSF/1 or OpenVMS systems, the console mode can be invoked from a remote terminal that is connected to the system through the COM2 port at the rear of the system (refer to Figure 2–24).

To invoke console mode in this way, perform the following steps:

1. Connect the remote terminal to the system.
2. Shut down the operating system.
3. When the shutdown completes, press Return.
   The console prompt (>>> or P00>>>) is displayed.

Connecting to Networks

Overview

The standard network option for your system is Ethernet. However, your system can support other network options by using network adapters that can be connected to the EISA and PCI buses.

For information about connecting your system to networks other than Ethernet, refer to the documentation that came with the network adapter.

Ethernet

The system can be connected to a ThinWire, AUI, or 10BASE-T Ethernet network as shown in Figure 2–23.

Caution

Before connecting the system to an Ethernet network, turn off the dc power to the system as described in the Turning the System Off section.

Figure 2–23 Ethernet Network Connections

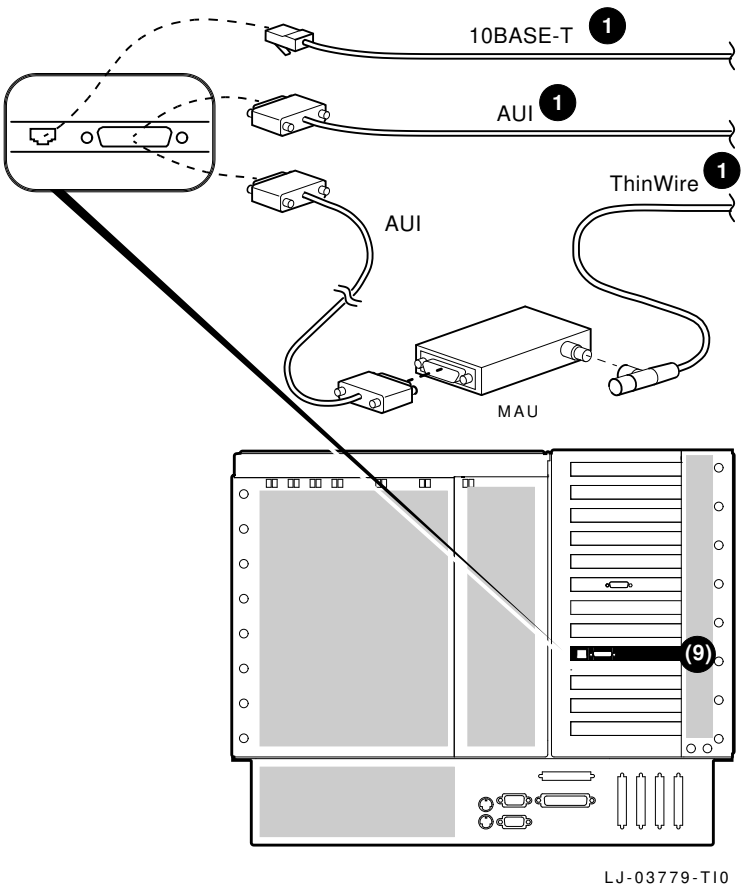

❶ Indicates an Ethernet option

Connecting Peripherals

Serial/Parallel Connections

Connect a serial or parallel printer, modem, or console terminal to your system through the serial and parallel ports at the rear of the system (refer to Figure 2–24).

Caution

Before connecting serial or parallel devices to the system, turn off the dc power to the system as described in the Turning the System Off section.

For information about connecting a specific device to your system, refer to the documentation for that device.

Note

The cable that connects to the rear of the VGA terminal has multiple plugs. These plugs are either color-coded or coded by letters that indicate the color. Use the coding on the cable and the corresponding coding on the terminal to determine where to attach each cable plug.

Figure 2–24 Connecting Serial and Parallel Devices

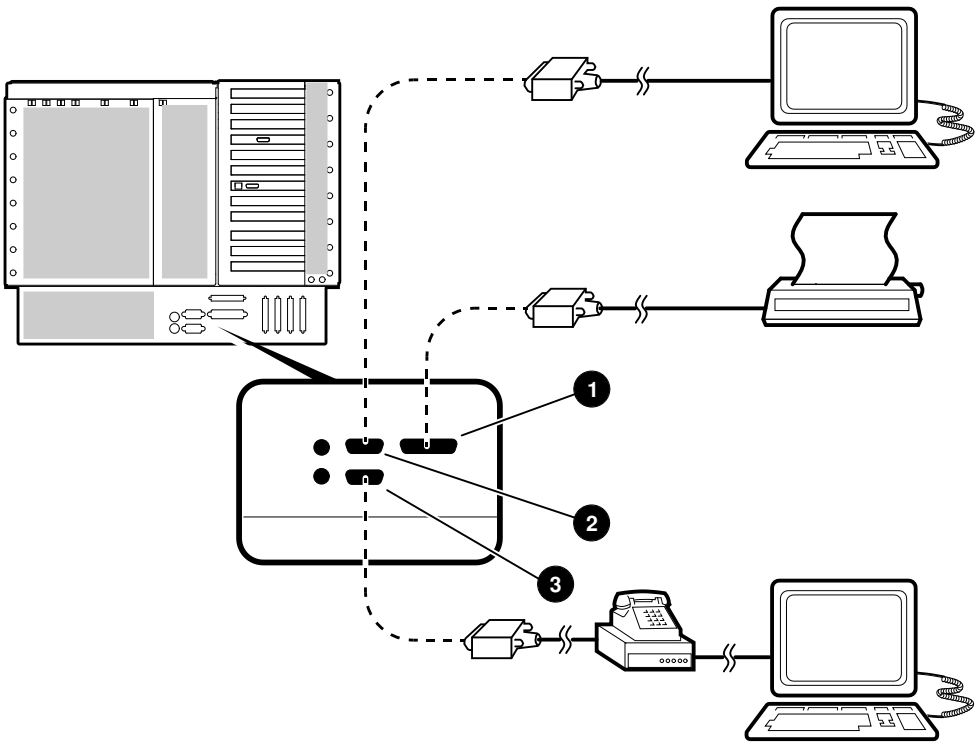

❶ Parallel port

❷ Serial port (COM1) (console terminal)

❸ Serial port (COM2) (auxiliary console device)

Terminal Connections

Either a VGA monitor or a Digital VT–series terminal (VT*xxx*) can be connected to the system as shown in Figure 2–25.

Caution

Before connecting a terminal to the system, turn off the dc power to the system as described in the Turning the System Off section.

For information about connecting a specific terminal to your system, refer to the documentation for that terminal.

Note

Digital VT–series terminal (VT*xxx*) requires an H8571-J serial adapter that is included with every system.

Figure 2–25 Terminal Connections

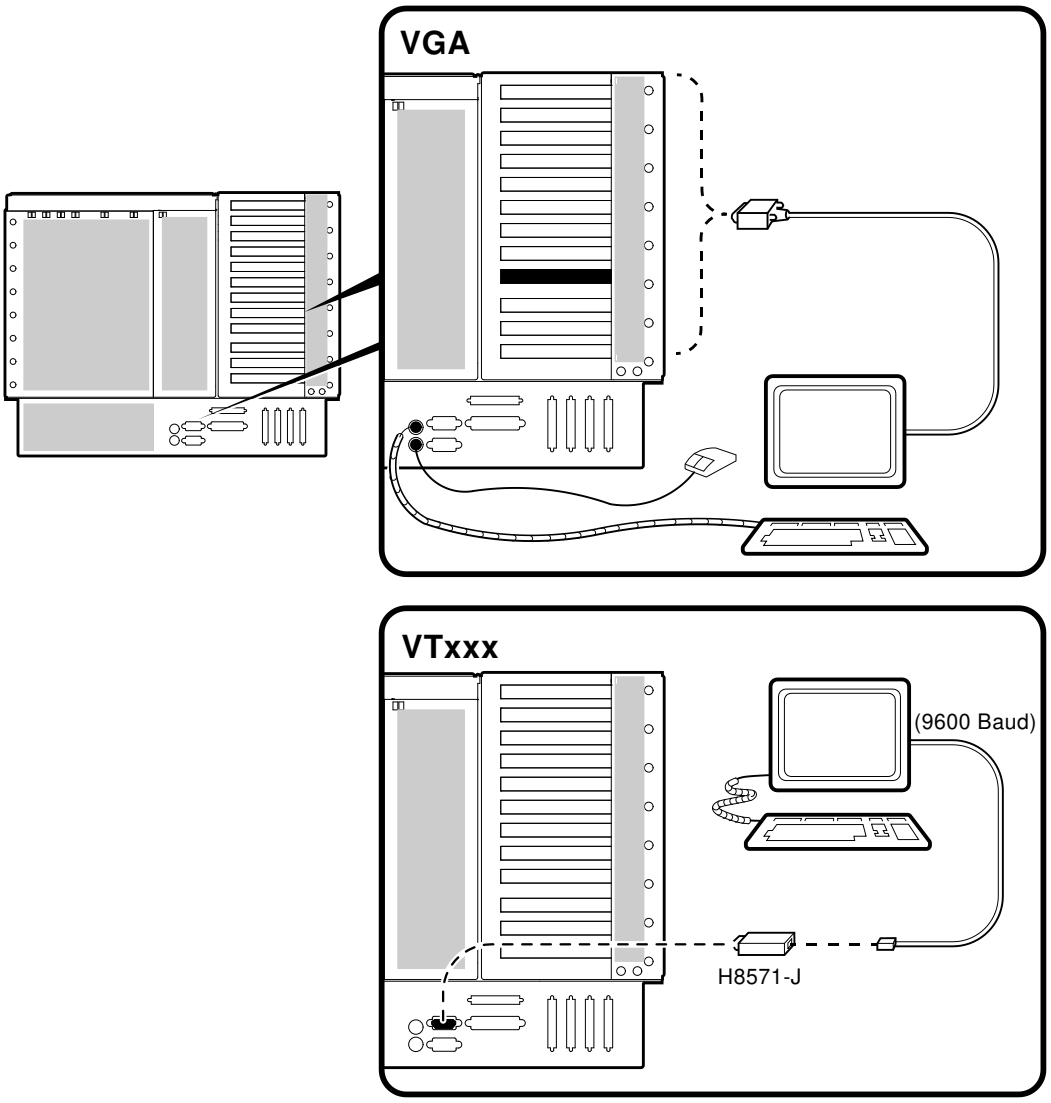

Installing and Removing the Front Bezel

The front bezel provides protection to the front of the system.

Installation

To install the front bezel, refer to Figure 2–26 and proceed as follows:

Note

To connect or disconnect the power cord to the system ac connector, the front bezel must be off.

1. Align the ball-stud receivers ❶ on the front bezel ❷ with the ball studs ❸ on the front of the system.
2. Press the front bezel ❷ into place.

Removal

To remove the front bezel ❷, press in at the bottom of the two pull loops ❹ on the bezel to rotate them down and out from the bezel. Then, using the two pull loops, pull the bezel away from the system.

Figure 2–26 Installing/Removing the Front Bezel

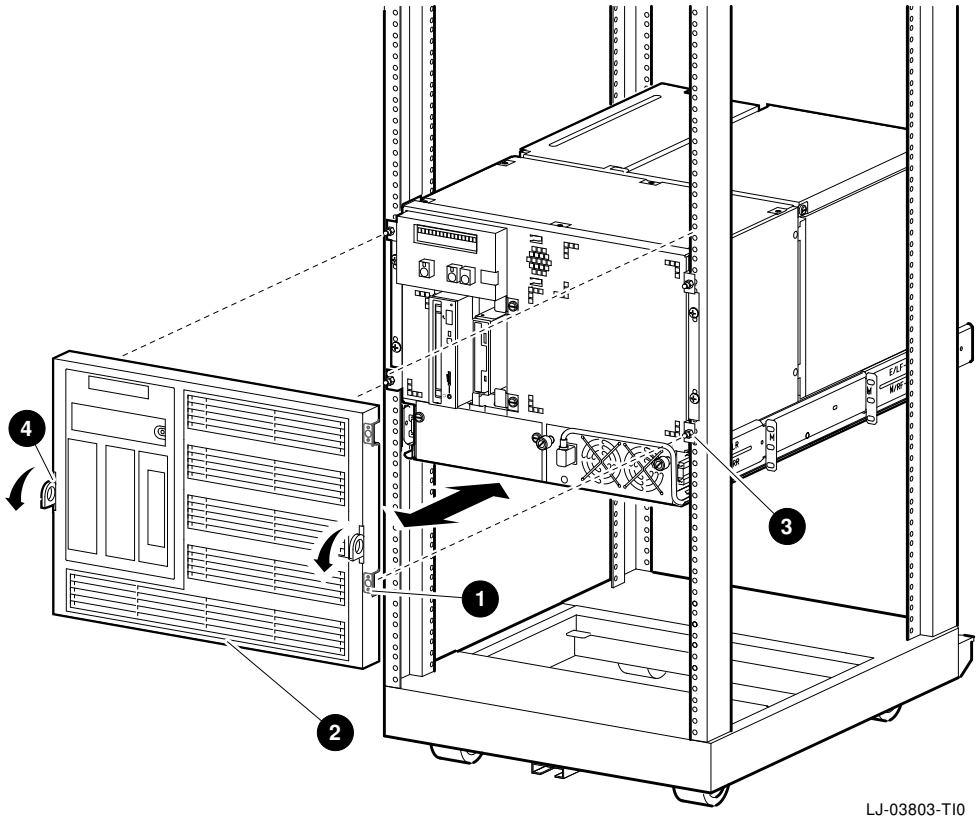

3
Operation

In This Chapter

This chapter covers the operation of the operator control panel. Refer to the *AlphaServer 2100 Series Owner's Guide* for information concerning the following topics:

- Operating Storage Devices (Chapter 1)
- Operating a Compact Disc Drive (Chapter 1)
- Operating a DAT Tape Drive (Chapter 1)
- Operating a Floppy Drive (Chapter 1)
- Operating a QIC Tape Drive (Chapter 1)
- Using the SRM Console Interface (Chapter 4)
- Using the ARC Console Interface (Chapter 5)
- Managing ARC Boot Selections (Chapter 6)

Operator Control Panel

The operator control panel (OCP), shown in Figure 3–1, is located on the front of the system. It contains a diagnostic display and buttons that allow the user to power, halt, and reset the system.

Figure 3–1 Operator Control Panel

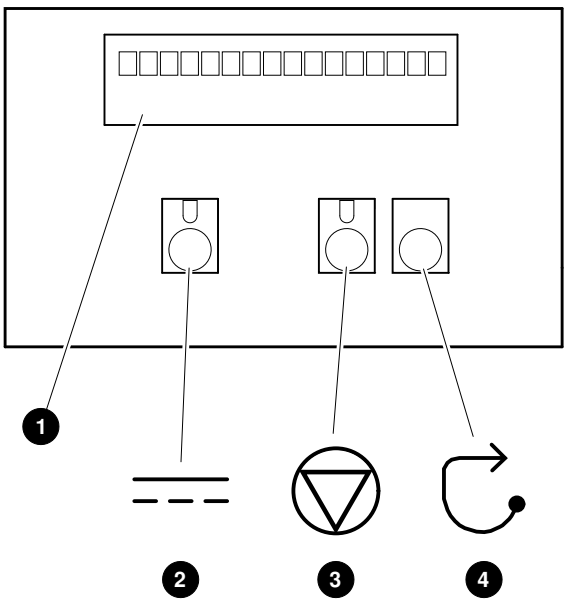

LJ-03778-TI0

❶ **Power-Up/Diagnostic Display**

The power-up/diagnostic display shows system status messages during the power-up and diagnostics sequence. Use the display to check the results of system self-tests.

For information about interpreting specific messages, refer to the Interpreting the OCP Power-Up/Diagnostic Display section in Chapter 5.

❷ **DC On/Off**

The DC On/Off button controls the flow of dc power to the system. Use the DC On/Off button and the ac power cord to apply and disconnect power to the system. The DC On/Off light, located on the DC On/Off button, is lit whenever dc power is present.

❸ **Halt (DEC OSF/1 and OpenVMS systems only)**

The Halt light, located on the Halt button, comes on briefly during the system self-tests. Thereafter, the Halt light comes on and remains lit whenever dc power is present and the Halt button is in the in position.

Invoking Console Mode: Pressing the Halt button invokes console mode when DEC OSF/1 and OpenVMS are running. Pressing the Halt button has no effect when Windows NT is running.

Caution

Pressing the Halt button interrupts your operating system session. Before pressing the Halt button, shut down the operating system according to the operating system shutdown procedure described in your operating system documentation.

Returning to Operating System Mode: To return to operating system mode, press the Halt button to the out position and reboot the operating system.

Note

If the Halt button is pressed by mistake and few or no console commands have been entered, it may be possible to resume your operating system session by entering the `continue` command.

Before Power-Up: Pressing the Halt button before turning the system on prevents the system from booting the operating system. Instead, the system will remain in console mode. To boot the operating system and continue system operation, press the Halt button to the out position.

❹ **Reset**

Pressing the Reset button resets the system. The system aborts all current processes, initializes, and performs startup self-tests. Use the Reset button to reset the system if it hangs or to initialize the system if you have changed system settings.

Caution

Pressing the Reset button halts all system processes. *Do not* press the Reset button while the operating system is running unless your system is hung and all other ways of terminating the process have been exhausted.

4

Options and Upgrades

In This Chapter

This chapter covers the following topics:

- Upgrade Overview
- Supported Options
- Verifying System Configuration
- Configuring System Options
  - System Bus
  - EISA Bus
  - ISA Bus
  - PCI Bus
  - SCSI Buses
- Power Supply Configurations
- Console Port Configurations

Upgrade Overview

Planning Your Upgrade

Plan an upgrade by performing the following tasks:

1. **Acquire an accurate list of the modules and devices in your current configuration.**

   Refer to your operating system documentation for information about acquiring configuration information using an operating system command.

   This information can be acquired in console mode. (Refer to the Invoking Console Mode section in Chapter 2 for information about invoking console mode.) Once you are in console mode, find the configuration information as follows:

   - If running DEC OSF/1 or OpenVMS, acquire a list of your system's modules and devices by entering the `show configuration` command at the console prompt. (Refer to the Verifying System Configuration section in this chapter for more information.)
   - If running Windows NT, acquire a list of your system's modules and devices by following the instructions in the Listing ARC Firmware Boot Device Names section in Chapter 5 in the *AlphaServer 2100 Series Owner's Guide*.

2. **Decide how your system will be changed.**

   Refer to the *Digital Systems and Options Catalog* to obtain the current description of the supported options.

3. **Order the option(s).**

4. **Install and configure the option(s) using the information in this chapter.**

   - To install the option, refer to the documentation shipped with the option.
   - To configure the option, refer to the appropriate section in this chapter.

Adding Third-Party Devices

Third-party devices are devices purchased from vendors other than Digital Equipment Corporation.

Before attempting to connect third-party devices or install third-party devices inside your system unit, first check with the third-party vendor to ensure that your system and operating system support the device.

For information about connecting third-party SCSI or licensed DSSI devices to the system by extending a mass-storage bus, refer to the SCSI Buses section presented later in this chapter.

Supported Options

Ordering Options

For a list of the supported options, refer to the *Digital Systems and Options Catalog*.

Digital Equipment Corporation regularly publishses the *Digital Systems and Options Catalog* to assist customers in ordering and configuring systems and hardware options. Each printing of the catalog presents all of the products that are announced, actively marketed, and available for ordering. If necessary, past editions should be retained for reference.

- To obtain the latest printed catalog, call 1-800-DIGITAL or contact your Digital service representative.
- Internet participants can obtain printable PostScript® files of any section of the catalog from the Internet. To access files over the Internet, issue the following commands:

```
ftp gatekeeper.dec.com
cd /pub/digital/info/soc
```

Verifying System Configuration

Before You Begin

Several console commands or menu options allow examination of the system configuration and environment variable settings.

To use these console commands or menu options, the console mode must be invoked. For information about invoking console mode, refer to the Invoking Console Mode section in Chapter 2.

Firmware Menu Options for Windows NT

The following ARC menu options are important for verifying system configuration on systems running the Windows NT operating system:

- `Available Hardware Devices Display`—Lists the ARC device names for devices installed in the system.
- `Set Default Variables`—Allows the selection of values for Windows NT firmware environment variables.

For information about using these menu options, refer to Chapter 5 in the *AlphaServer 2100 Series Owner's Guide*.

Note

The next sections describe the SRM console configuration commands. If running the Windows NT operating system, go to the System Bus Options section in this chapter.

Firmware Console Commands for DEC OSF/1 and OpenVMS

The following SRM console commands are important for verifying system configuration on systems running either the DEC OSF/1 or OpenVMS operating system.

- `show config` (described in the show config section)—Displays the buses on the system and the devices found on those buses.
- `show device` (described in the show device section)—Displays the devices and controllers in the system.
- `show memory` (described in the show memory section)– Displays main memory configuration.
- `set` and `show` (described in the Setting and Showing Environment Variables section)–Set and display environment variable settings. For more information about using the `set` and `show` commands to set and display environment variables, refer to Chapter 4 in the *AlphaServer 2100 Series Owner's Guide*.

show config

The `show config` command displays all devices found on the system bus, PCI bus, and EISA bus. The information in the display can be used to identify target devices for commands such as `boot` and `test`, as well as to verify that the system sees all the devices that are installed.

The configuration display includes the following:

- Core system status:

  CPU, memory, and standard I/O are shown with the results of power-up tests: P (pass), F (fail), — (not present)

- Hose 0, 32-bit PCI:
  - Slot 0 = Ethernet adapter (EWA0)
  - Slot 1 = SCSI controller on standard I/O, along with storage drives on the bus
  - Slot 2 = EISA-to-PCI bridge chip
  - Slots 3–5 = Reserved
  - Slots 6–8 = Correspond to PCI card-cage slots: PCI0, PCI1, and PCI2. In the case of storage controllers, the devices off the controller are also displayed.

- Hose 1, EISA:

  Slot numbers correspond to EISA card-cage slots (1–8). In the case of storage controllers, the devices off the controller are also displayed.

- Hose 2, PCI:

  Reserved for future PCI expansion.

Synopsis:

show config

Examples:

```
P00>>> show config
                        Digital Equipment Corporation
                            Alpha AXP (tm) Server

Console X3.5-2770      VMS PALcode X5.48U, OSF PALcode X1.35L

        Component       Status  Module ID
        CPU 0           P       B2020-AA DECchip (tm) 21064-3
        CPU 1           P       B2020-AA DECchip (tm) 21064-3
        CPU 2           P       B2020-AA DECchip (tm) 21064-3
        CPU 3           P       B2020-AA DECchip (tm) 21064-3
        Memory 0        -
        Memory 1        -
        Memory 2        P       B2021-BA  64 MB
        Memory 3        -
        IO              P       -
                                dva0.0.0.0.1      RX26

Core System Status      Pass
```

```
Hose 0, PCI
        slot 0   DECchip 21040-AA
                                ewa0.0.0.0.0      08-00-2B-E1-01-ED
        slot 1   NCR 53C810
                                dka0.0.0.1.0      RZ35
                                pka0.7.0.1.0      SCSI Bus ID 7
        slot 2   Intel 82375EB
        slot 6   NCR 53C810
                                dkb0.0.0.6.0      RZ25
                               pkb0.7.0.6.0      SCSI Bus ID 7
        slot 8   Qlogic ISP1020
                                dkc0.0.0.8.0      RZ35
                                dkc100.1.0.8.0    RZ35
                                dkc300.3.0.8.0    RZ35
                                pkc0.7.0.8.0      SCSI Bus ID 7
Hose 1, EISA
        slot 1   MLX0075
                                dra0.0.0.1.1      2 Member RAID 0 Set
                                dra1.0.0.1.1      4 Member RAID 5 Set
                                MLX0075.0.0.1.1
        slot 2   DEC2E00
                                dua0.0.0.2.1      RF36
                                dua1.1.0.2.1      RF35
                                dua2.2.0.2.1      RF35
                                dua3.3.0.2.1      RF35
                                pua0.5.0.2.1      DSSI Bus ID 5
        slot 3   CPQ3011

        slot 4   ADP0001
                                dkd0.0.0.4.1      RZ28
                                dkd100.1.0.4.1    RZ26
                                dkd200.2.0.4.1    RZ26
                                dkd300.3.0.4.1    RZ26
                                dkd600.6.0.4.1    RRD42
                                mkd400.4.0.4.1    TLZ06
                                mkd500.5.0.4.1    TANDBERG TDC 3800
                                pkd0.7.0.4.1      SCSI Bus ID 7
        slot 5   DEC4220
                                era0.0.0.5.1      08-00-2B-39-4F-4E
        slot 6   MLX0072
                                drb0.0.0.6.1      2 Member RAID 1 Set
                                MLX0072.0.0.6.1
        slot 7   ADP0001
                                dke300.3.0.7.1    RRD42
                                mke500.5.0.7.1    TZ30
                                pke0.7.0.7.1      SCSI Bus ID 7
Hose 2, PCI
P00>>>
```

show device

The `show device` command displays the devices and controllers in the system. The device name convention is shown in Figure 4–1.

Figure 4–1 Device Name Convention

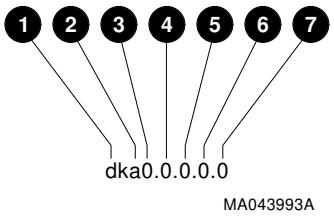

❶ Driver ID:

Two-letter port or class driver designator
DR–RAID set device
DV–Floppy drive
ER–Ethernet port (EISA)
EW–Ethernet port (PCI)
PK–SCSI port, DK–SCSI disk, MK–SCSI tape
PU–DSSI port, DU–DSSI disk, MU–DSSI tape

❷ Storage Adapter ID: One-letter storage adapter designator (A,B,C . . .)

❸ Device Unit Number: Unique device unit number (MSCP Unit Number)

SCSI unit numbers are forced to 100 X Node ID

❹ Bus Node Number: Bus Node ID

❺ Channel Number: Used for multichannel devices

❻ Slot Number:

- For EISA options—Correspond to EISA card-cage slot numbers (1–*)
- For PCI options:
  - Slot 0 = Ethernet adapter (EWA0)
  - Slot 1 = SCSI controller on standard I/O
  - Slot 2 = EISA-to-PCI bridge chip

- Slots 3–5 = Reserved
- Slots 6–8 = Correspond to PCI card-cage slots: PCI0, PCI1, and PCI2

❼ Hose Number: 0 PCI_0 (32-bit PCI); 1 EISA; 2 PCI_1

Synopsis:

show device [device_name]

Arguments:

[device_ name]	The device name or device abbreviation. When abbreviations or wildcards are used, all devices that match the type are displayed.

Examples:

```
>>> show device
dka0.0.0.1.0              DKA0                          RZ25L  0006
dka100.1.0.1.0            DKA100                        RZ25L  0006
dka600.6.0.1.0            DKA600                        RRD43  2893
dva0.0.0.0.1              DVA0                          RX26
mka500.5.0.1.0            MKA500                        TLZ06  0435
ewa0.0.0.0.0              EWA0             08-00-2B-3B-42-FD
pka0.7.0.1.0              PKA0                 SCSI Bus ID 7
>>> show device dk pk
dka0.0.0.1.0              DKA0                          RZ25L  0006
dka100.1.0.1.0            DKA100                        RZ25L  0006
dka600.6.0.1.0            DKA600                        RRD43  2893
dva0.0.0.0.1              DVA0                          RX26
mka500.5.0.1.0            MKA500                        TLZ06  0435
pka0.7.0.1.0              PKA0                 SCSI Bus ID 7
>>>
```

show memory

The `show memory` command displays information for each memory module in the system.

Synopsis:

`show memory`

Examples:

```
>>> show memory
 ❶      ❷       ❸          ❹          ❺         ❻
Module   Size    Base Addr   Intlv Mode  Intlv Unit  Status
------   -----   ---------   ----------  ----------  ------
  0       64MB   00000000      1-Way         0       Passed
  1                                                  Not Installed
  2                                                  Not Installed
  3                                                  Not Installed
Total Bad Pages 0 ❼
>>>
```

❶ Module slot number

❷ Size of memory module

❸ Base or starting address of memory module

❹ Interleave mode—number of modules interleaved (1–4-way interleaving)

❺ Interleave unit number

❻ Status (passed, failed, or not installed)

❼ Number of bad pages in memory (8 kB/page)

Setting and Showing Environment Variables

Environment variables are typically set when you are configuring a system.

Synopsis:

set [-default] [-integer] -[string] envar value

show envar

Arguments:

envar	The name of the environment variable to be modified.
value	The value that is assigned to the environment variable. This may be an ASCII string.

Options:

-default	Restores variable to its default value.
-integer	Creates variable as an integer.
-string	Creates variable as a string (default).

Examples:

```
>>> set bootdef_dev eaz0
>>> show bootdef_dev
eza0
>>> show auto_action
boot
>>> set boot_osflags 0,1
>>>
```

For more information about using the `set` and `show` commands, including the environment variables that you can set, refer to Chapter 4 in the *AlphaServer 2100 Series Owner's Guide*.

System Bus Options

The system bus interconnects the CPU modules, memory modules, and the optional PCI extended I/O module. It is the hardware structure through which data processed by the microprocessor is transferred throughout the system.

Figure 4–2 shows the location of the system bus and system bus options on the card cage. Your system supports options for several types of bus architectures; including EISA, ISA, and PCI. The next sections describe the system bus options for your system.

Figure 4–2 System Bus Option Locations

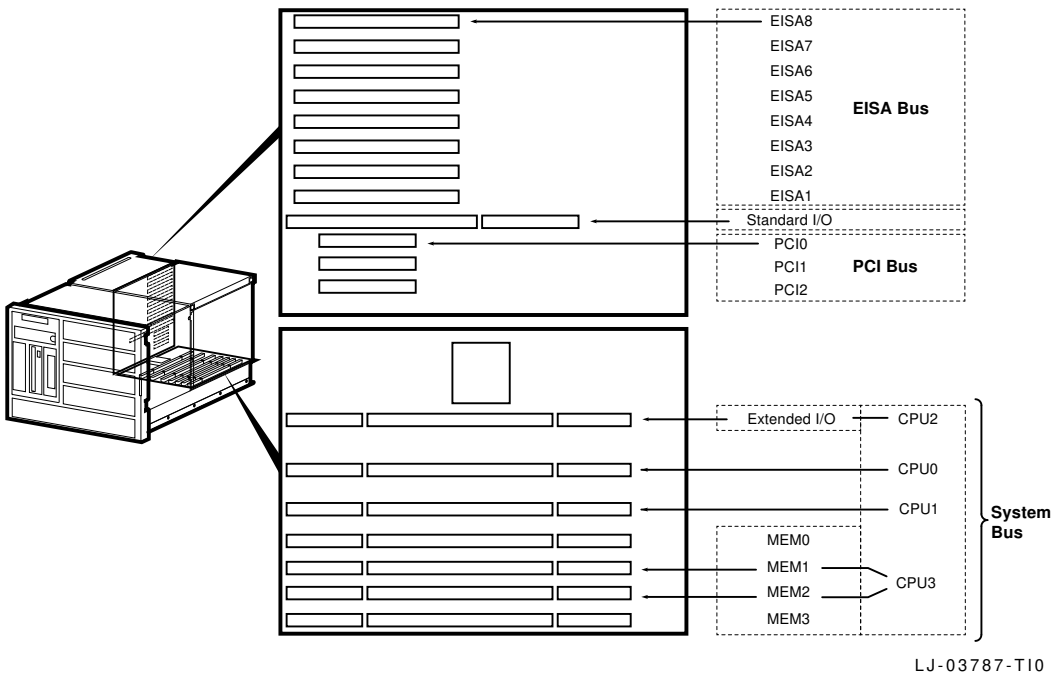

CPU Modules

The system can support up to four (4) CPU modules in a symmetric multiprocessing (SMP) configuration. Note the following:

- All systems must have a CPU module installed in system bus slot 2 (CPU 0).
- Systems with more than two CPUs displace the 64-bit PCI expansion or memory module capacity as shown in Figure 4–3.

Warning

Before installing a CPU module, turn off all power to the system (both ac and dc). Refer to the Turning the System Off section in Chapter 2 for information about turning off ac and dc power.

Figure 4–3 System Bus Configurations According to the Number of CPUs

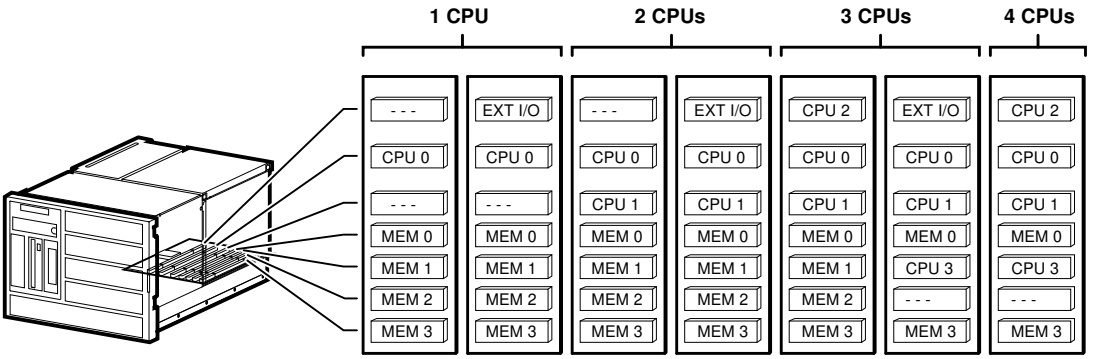

Warning: CPU and Memory modules have parts that operate at high temperatures. Wait two minutes after power is removed before handling these modules.

Memory Modules

The system can support up to four (4) memory modules (for a maximum memory capacity of 2 GB). A minimum of one memory module is required.

Warning

Before installing a memory module, turn off all power to the system (both ac and dc). Refer to the Turning the System Off section in Chapter 2 for information about turning off ac and dc power.

Memory is available in three variations as follows:

- 80-ns memory modules
  - MS450–BA (B2021–BA) 64-MB 80-ns memory
  - MS450–CA (B2021–CA) 128-MB 80-ns memory
- 60-ns memory modules
  - MS451–CA (B2022–CA) 512-MB 60-ns memory

Extended I/O (64-Bit PCI) Module

A CPU slot (system bus slot 1, CPU 2) can be substituted for additional I/O expansion. An extended I/O module provides two 64-bit PCI slots.

Standard I/O Module

Warning

Before installing the standard I/O module, turn off all power to the system (both ac and dc). Refer to the Turning the System Off section in Chapter 2 for information about turning off ac and dc power.

The standard I/O module provides the standard set of I/O functions and is required in all systems. The standard I/O module resides in a dedicated slot (I/O) in the EISA bus card cage (refer to Figure 4–2). It provides:

- A Fast SCSI-2 controller chip that supports up to seven (7) drives.
- The firmware console subsystem on 512 kB of Flash ROM.
- An Ethernet controller with AUI or twisted-pair connectors.
- A floppy drive controller.
- Two serial ports with full-modem control and the parallel port.
- The keyboard and mouse interface.
- The speaker interface.
- The EISA-to-PCI bridge set.
- The TOY clock.

EISA Bus Options

The EISA bus (Extended Industry Standard Architecture bus) is a 32-bit industry-standard I/O bus. The EISA bus is a superset of the well-established 16-bit ISA bus and has been designed to accept newer 32-bit components while still remaining compatible with older 8-bit and 16-bit cards.

EISA offers good performance, up to 33 MB/s for bus masters and direct memory access (DMA) devices. Up to eight (8) EISA or ISA modules can reside in the EISA bus portion of the card cage. All slots are bus master slots. EISA slots can be filled in any order. Figure 4–2 shows the location of the EISA options in the card cage. Access to the EISA options in the card cage is by way of the left-side access door shown in Figure 1–6. Ensure that the left-side access door is closed and its two retaining screws are tightened before turning the system on.

For information about installing a specific option, refer to the documentation for that option. For information about configuring an EISA option, refer to the Configuring EISA and ISA Options section.

Warning

Before installing EISA bus options, turn off all power to the system (both ac and dc). Refer to the Turning the System Off section in Chapter 2 for information about turning off ac and dc power.

Warning: For protection against fire, only use modules with current-limited outputs.

ISA Bus Options

The ISA bus (Industry Standard Architecture bus) is a 16-bit industry-standard I/O bus. The EISA bus is a superset of the well-established ISA bus and has been designed to be backward compatible with 16-bit and 8-bit architectures. Therefore, ISA modules can be used in your server, provided the operating system supports the device.

Up to eight (8) EISA or ISA modules can reside in the EISA bus portion of the card cage. Figure 4–2 shows the location of the options in the card-cage. Access to the options in the card cage is by way of the left-side access door shown in Figure 1–6. Ensure that the left-side access door is closed and its two retaining screws are tightened before turning the system on.

For information about installing a specific option, refer to the documentation for that option. For information about configuring an ISA option, refer to the Configuring EISA and ISA Options section.

Warning

Before installing ISA bus options, turn off all power to the system (both ac and dc). Refer to the Turning the System Off section in Chapter 2 for information about turning off ac and dc power.

Warning: For protection against fire, only use modules with current-limited outputs.

Identifying EISA and ISA Options

The option board can be identified as an EISA or ISA by examining its contacts (refer to Figure 4–4):

- EISA boards have two rows of contacts with several gaps.
- ISA boards have one row of contacts and no more than one gap.

Figure 4–4 EISA and ISA Boards

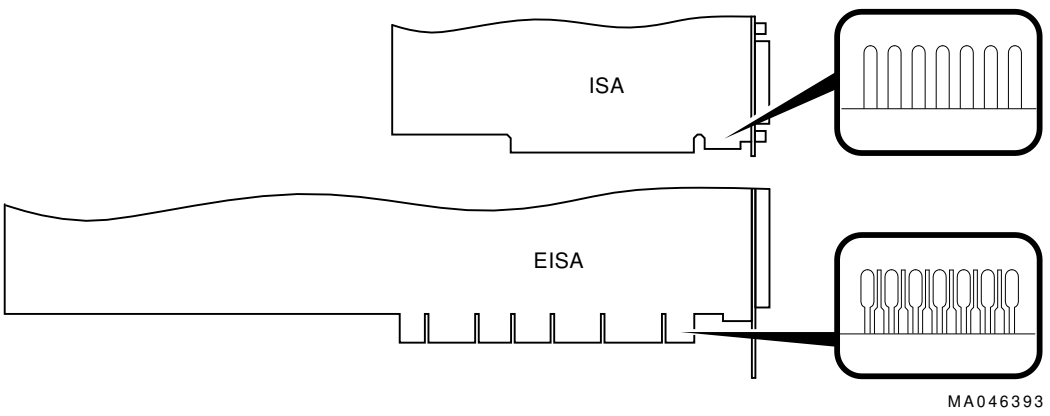

Configuring EISA and ISA Options

EISA Configuration Utility

Whenever adding, removing, or moving an EISA or ISA board in your system, run a utility called the EISA Configuration Utility (ECU). Each EISA or ISA board has a corresponding configuration (CFG) file, which describes the characteristics and the system resources required for that option. The ECU uses the CFG file to create a conflict-free configuration. The ECU is a menu-based utility that provides online help. It serves as a guide through the configuration process. The ECU is run from the ARC menu interface.

System Configuration Diskette

The ECU is supplied on the System Configuration Diskette that was shipped with your system. Make a copy of the System Configuration Diskette and keep the original in a safe place. Use the backup copy for configuring the system. The System Configuration Diskette must have the volume label SYSTEMCFG.

Note

The CFG files supplied with the option to be installed may not work on this system if the option is *not supported*. Before installing an option, ensure that your system supports the option. The *Digital Systems and Options Catalog* lists the supported options.

Before Running the ECU

Before running the ECU, perform the following steps:

1. Install EISA option(s). (Install ISA modules *after* running the ECU.)

   For information about installing a specific option, refer to the documentation for that option.

2. Familiarize yourself with the utility.

   To find more information about the ECU, read the ECU online help. To read the online help, start the ECU (refer to the Starting the ECU section). Online help for the ECU is located under step 1, ''Important EISA Configuration Information''.

3. Familiarize yourself with the configuration procedure for your system:

   - If you are configuring an EISA bus that contains only EISA options, refer to Table 4–1.
   - If you are configuring an EISA bus that contains both ISA and EISA options, refer to Table 4–2.

4. Locate the ECU diskette for your operating system. Make a copy of the ECU diskette and keep the original in a safe place. Use the backup copy for configuring options.

   - ECU Diskette DECpc AXP (AK-PYCJC-CA) for Windows NT systems
   - ECU Diskette DECpc AXP (AK-Q2CRB-CA) for DEC OSF/1 and OpenVMS systems

   The ECU diskette is shipped in the accessories carton with your system.

Note

The current version of ECU requires a VGA terminal.

Starting the ECU

Complete the following steps to start the ECU:

1. Invoke the console firmware.
   - **For systems running Windows NT**—Shut down the operating system or power up to the console Boot menu.
   - **For systems running DEC OSF/1 or OpenVMS**—Shut down the operating system and press the Halt button, or power up with the Halt button set to the in position. When the console prompt >>> displays, set the Halt button to the out position.
2. Start ECU as follows:
   - **For systems running Windows NT**—Select the following menus:
     a. From the Boot menu, select the Supplementary menu.
     b. From the Supplementary menu, select the Setup menu. Insert the ECU diskette for Windows NT systems (AK-PYCJC-CA) into the floppy drive.
     c. From the Setup menu, select `Run EISA configuration utility from floppy`. This boots the ECU program.
   - **For systems running DEC OSF/1 or OpenVMS**—Start the ECU program as follows:
     a. Insert the ECU diskette for DEC OSF/1 or OpenVMS systems (AK-Q2CRB-CA) into the floppy drive.
     b. Enter the `ecu` command.

     The message `loading ARC firmware` displays. Loading the ARC firmware takes approximately two (2) minutes. When the firmware has finished loading, the ECU program is booted.
3. Complete the ECU procedure according to the guidelines provided in the following sections.
   - When configuring an EISA bus that contains only EISA options, refer to Table 4–1.

Note

When configuring only EISA options, do not perform step 2 of the ECU, ''Add or remove boards''. (EISA modules are recognized and configured automatically.)

- When configuring an EISA bus that contains both ISA and EISA options, refer to Table 4–2.

4. After you have saved and exited from ECU:
   - **For systems running Windows NT**—Remove the ECU diskette from the floppy drive and boot the operating system.
   - **For systems running DEC OSF/1 or OpenVMS**—Remove the ECU diskette from the floppy drive. Return to the SRM console firmware as follows:
     a. From the Boot menu, select the Supplementary menu.
     b. From the Supplementary menu, select `Set up the system`.
     c. From the Setup menu, select `Switch to OpenVMS or OSF console`. This allows the operating system console to be selected.
     d. Select your operating system and then press Enter on `Setup menu`.
     e. When the message `Power-cycle the system to implement the change` displays, press the Reset button. (Do not press the DC On/Off button.)

     Once the console firmware is loaded and the device drivers are initialized, boot the operating system.
5. Verify that the new options are configured correctly.

Configuring EISA Options

EISA boards are configured automatically. Refer to Table 4–1 for a summary of steps to configure an EISA bus *that contains no* ISA options. Review the Before Running the ECU section presented earlier in this chapter. Then run the ECU as described in the Starting the ECU section.

Note

It is not necessary to run step 2 of the ECU, ''Add or remove boards''. (EISA modules are recognized and configured automatically.)

Table 4–1 Summary of Procedure for Configuring EISA Bus (EISA Options Only)

Step	Explanation
Install the EISA option	Use the instructions provided with the EISA option.
Power up the system and run the ECU	If the ECU locates the required CFG files, it displays the Main menu. The CFG file for the option may reside on a configuration diskette packaged with the option or may be included on the System Configuration Diskette. **Note** It is not necessary to run step 2 of the ECU, ''Add or remove boards.'' (EISA modules are recognized and configured automatically.)
View or Edit Details (optional)	The ''View or Edit Details'' ECU option is used to change user-selectable settings or to change the resources allocated for these functions (IRQs, DMA channels, I/O ports, and so on). This step is not required when using the board's default settings.
Save your configuration	The ''Save and Exit'' ECU option saves your configuration information to the system's nonvolatile memory.
Return to the SRM console (DEC OSF/1 and OpenVMS systems only) and restart the system.	Refer to step 4 of the Starting the ECU section for operating-system-specific instructions.

Configuring EISA/ISA Options

ISA modules are configured manually, whereas EISA modules are configured through the ECU software (automatically). Refer to Table 4–2 for a summary of steps to configure an EISA bus *that contains both* EISA and ISA options. Review the Before Running the ECU section presented earlier in this chapter. Then run the ECU as described in the Starting the ECU section.

Table 4–2 Summary of Procedure for Configuring EISA Bus with ISA Options

Step	Explanation
Install or move the EISA option. Do not install the ISA boards	Use the instructions provided with the EISA option. ISA boards are installed *after* the configuration process is complete.
Power up and run the ECU	If an EISA option was installed, the ECU will need to locate the CFG file for that option. The CFG file for the option may reside on a configuration diskette packaged with the option or may be included on the System Configuration Diskette.
Add the ISA board to the configuration list	Use the ''Add or Remove Boards'' ECU option to add the CFG file for the ISA option and to select an acceptable slot for the option. The CFG file for the option may reside on a configuration diskette packaged with the option or may be included on the System Configuration Diskette. If the CFG file for the ISA option *cannot* be found, select the generic CFG file for ISA options from the configuration diskette.
View or Edit Details (optional)	The ''View or Edit Details'' ECU option is used to change user-selectable settings or to change the resources allocated for these functions (IRQs, DMA channels, I/O ports, and so on). This step is not required when using the board's default settings.
Examine and set the required switches to match the displayed settings	The ''Examine Required Switches'' ECU option displays the correct switch and jumper settings that must be physically set for each ISA option. Although the ECU cannot detect or change the settings of ISA boards, it uses the information from the previous step to determine the correct switch settings for these options. Physically set the board's jumpers and switches to match the required settings.
Save your configuration	The ''Save and Exit'' ECU option saves your configuration information to the system's nonvolatile memory.
Return to the SRM console (DEC OSF/1 and OpenVMS systems only) and turn off the system	Refer to step 4 of the Starting the ECU section for information about returning to the console.
Install the ISA board and turn on the system	Use the instructions provided with the ISA option.

PCI Bus Options

PCI (Peripheral Component Interconnect) is an industry-standard expansion I/O bus that is the preferred bus for high-performance I/O options. Your system supports 32-bit PCI options.

The PCI bus is shown in Figure 4–2. There are currently three (3) slots reserved for 32-bit PCI options. A PCI board is shown in Figure 4–5.

Install PCI boards according to the instructions supplied with the option. PCI boards require no additional configuration procedures; the system automatically recognizes the boards and assigns the appropriate system resources.

Warning

Before installing a PCI option, turn off all power to the system (both ac and dc). Refer to the Turning the System Off section in Chapter 2 for information about turning off ac and dc power.

Warning: For protection against fire, only use modules with current-limited outputs.

Figure 4–5 PCI Board

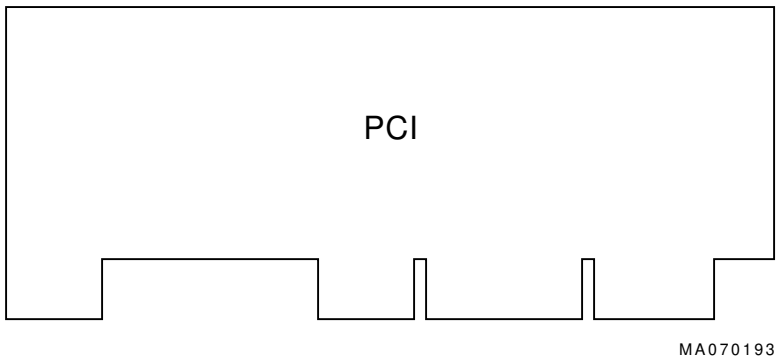

SCSI Buses

A SCSI bus expansion port on the rear of the system enables the ability to extend the bus that runs through the removable-media mass-storage compartment to the outside of the system. As a result, the external mass-storage devices can be connected to the buses inside the system.

A Fast SCSI-2 adapter on the standard I/O module provides a single-ended SCSI bus for the system.

All tabletop or rackmounted SCSI-2 devices are supported via EISA- or PCI-based SCSI adapters. Use the following rules to determine if a device can be used on your system:

- The device must be supported by the operating system. Consult the software product description or hardware vendor.
- No more than seven (7) devices can be on any one SCSI-2 controller, and each must have a unique SCSI ID.
- The entire SCSI bus length, from terminator to terminator, must not exceed 6.0 m (19.7 ft) for single-ended SCSI-2 at 5 MB/s, or 3.0 m (9.8 ft) for single-ended SCSI-2 at 10 MB/s.

  For AlphaServer 2100 RM series systems, the internal cabling for the removable-media bus is 2.0 m (6.6 ft); therefore, the maximum length for external expansion is 4.0 m (13.1 ft).

Native SCSI Bus

The Fast SCSI-2 adapter on the standard I/O module supports the following internal SCSI devices:

- One or two hard-disk drives and up to two 13.3-cm (5.25-in.) half-height devices.

This bus can be extended to a rackmounted StorageWorks shelf or to an external expander to support up to seven (7) drives.

Internal SCSI Cables for 3-Channel RAID EISA Controller

The 2T-SWXCK-AA cable kit used with the 3-channel RAID EISA controller consists of two cables and the associated mounting hardware. One cable kit accommodates one 3-channel RAID EISA controller. The SCSI port for channel 0 of the controller is on the rear bulkhead. The SCSI ports for channels 1 and 2 are provided by installing the 2T-SWXCK-AA cable kit to allow connections to ports at the rear of the system.

The maximum number of 2T-SWXCK-AA cable kits that can be used is two.

Installing the 2T-SWXCK-AA Cable Kit

To install the 2T-SWXCK-AA cable kit, refer to Figure 4–6 and the following procedure:

1. Orient the IDC end of the first cable, as shown in the top panel of Figure 4–6, so that it aligns with the channel 1 connector and insert the cable onto this connector on the 3-channel RAID EISA controller.
2. Repeat the procedure in step 1 for the second cable, connecting it to channel 2 on the 3-channel RAID EISA controller.
3. Insert the other ends of the cables through the slot in the bottom left of the cabinet, as shown in the top panel of Figure 4–6, and route them to the rear connector slots (A through D).
4. Remove the cover plates from the rear connector slots that are to be used.

Note

The first cable kit should use rear connector slots A and B. The second cable kit (if installed) should use rear connector slots C and D.

5. Insert the cable connectors into the proper slots and fasten them with the screws provided as shown in the bottom panel of Figure 4–6.

When the 2T-SWXCK-AA cable kits are installed, SCSI devices can be connected to the SCSI ports (A through D) at the rear of the system in addition to the system bulkhead port.

Figure 4–6 Installing the 2T-SWXCK-AA RAID Cable Kit

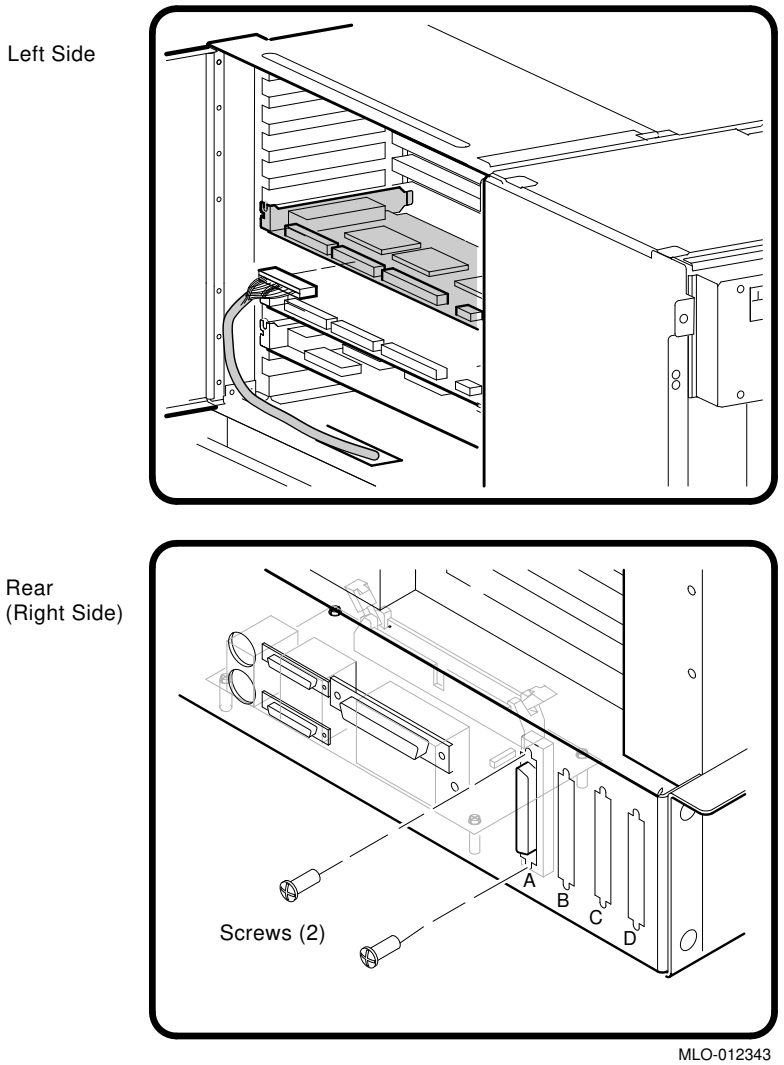

Installing Removable Media Storage Devices

Warning

Before installing a storage device, turn off all power to the system (both ac and dc). Refer to the Turning the System Off section in Chapter 2 for information about turning off ac and dc power.

To install a removable media device, refer to Figure 4–7 and proceed as follows:

1. Remove the front bezel as described in the Installing and Removing the Front Bezel section in Chapter 2.
2. Turn off all power to the system (both ac and dc). Refer to the Turning the System Off section in Chapter 2.

Warning

In the next step, ensure that the cabinet is stabilized before pulling the system out of the cabinet.

3. Remove the four 10-32 screws securing the system to the front cabinet rails (refer to Figure 2–10) and pull the system out of the cabinet.
4. Remove the top-front access cover shown in Figure 1–5.
5. Locate bracket holes A and B. For RRD*nn* or TLZ0*n*, use bracket holes A. For TZK11 drives use bracket holes B.
6. Attach the bracket ❶ to the drive ❷ using four M3 x 6 mm flat-head screws ❸ and the appropriate bracket holes (A or B).
7. Set the device's node ID so that there are no duplicate node IDs, as each device must have a unique node ID. Nodes 0–6 are available for drives, and node 7 is reserved for the host adapter. Refer to the device documentation on how to set the node ID on the device.
8. Insert the drive ❷ with the attached bracket into the appropriate slot and connect the drive cables ❹.

9. Secure the drive to the front of the system using two captive screws ❺.

Figure 4–7 Installing Removable Media

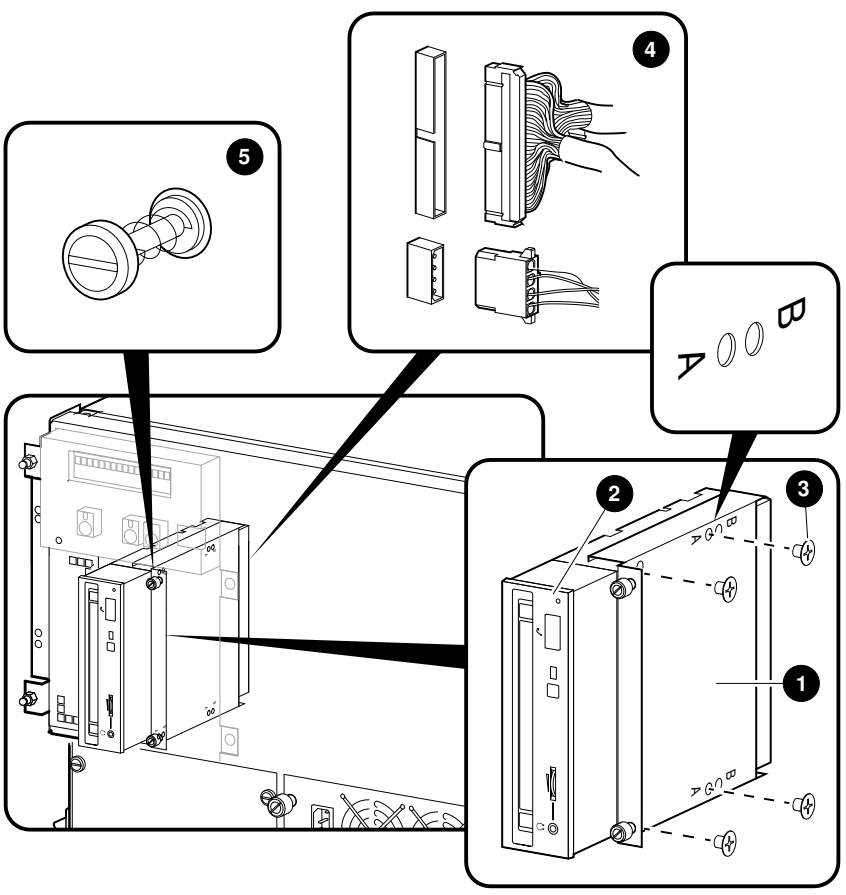

LJ-03844-TI0

To install a hard-disk drive, refer to Figure 4–8 and proceed as follows:

1. Remove the front bezel as described in the Installing and Removing the Front Bezel section in Chapter 2.
2. Turn off all power to the system (both ac and dc). Refer to the Turning the System Off section in Chapter 2.

Warning

In the next step, ensure that the cabinet is stabilized before pulling the system out of the cabinet.

3. Remove the four 10-32 screws securing the system to the front cabinet rails (refer to Figure 2–10) and pull the system out of the cabinet.
4. Remove the top-front access cover shown in Figure 1–5.
5. Locate the four rubber grommets ❶ in the accessories kit.
6. Screw the four rubber grommets ❶ into the drive ❷.
7. Push the drive into the appropriate keyhole openings ❸ of the mounting bracket ❹ and push to the right (when facing the system) until the locking tab ❺ snaps into place.
8. Connect the drive cables ❻.

Figure 4–8 Installing a Hard-Disk Drive

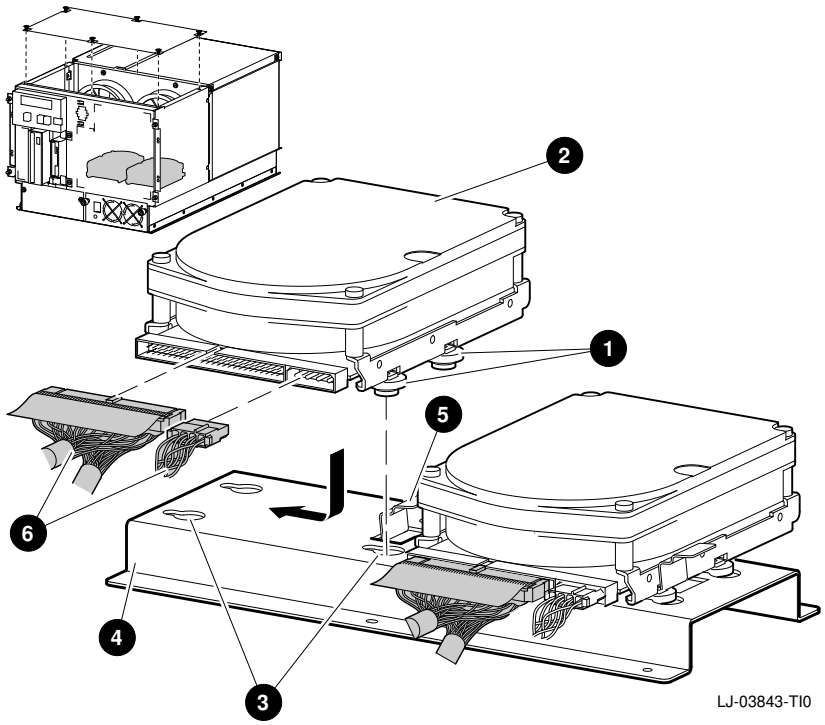

Note

Figure 4–8 shows a rear view of the drives to provide a clear view of the cabling connections.

Installing Internal DSSI Cables

Internal DSSI Cable for EISA-to-DSSI Adapters

EISA-to-DSSI adapters provide a DSSI bus for EISA-based systems. The number of adapters that can be installed in a single system is only limited by the configuration rules and the number of available EISA bus slots.

These adapters can be configured as an end-node, with a single host on a bus, or as a middle-node in a DSSI VMScluster.

End-node configurations *do not require* the installation of the internal DSSI cable to provide a second DSSI connection to ports at the rear of the system.

Middle-node configurations *require* the installation of the internal DSSI cable to provide a second DSSI connection to ports at the rear of the system.

Installing the Internal DSSI Cable

To install the internal DSSI cable, refer to Figure 4–9 and the following procedure:

1. Orient the end of the cable, as shown in the top panel of Figure 4–9, so that it aligns with the adapter connector and insert the cable onto this connector.
2. Insert the other end of the cable through the slot in the bottom left of the cabinet, as shown in the top panel of Figure 4–9, and route it to the rear connector slots (A through D).
3. Remove the cover plate from the rear connector slot that is to be used.

Note

The first internal DSSI cable should use rear connector slot A. The second cable (if installed) should use rear connector slot B, and so forth.

4. Insert the cable connector into the proper slot and fasten it with the screws provided as shown in the bottom panel of Figure 4–9.

Figure 4–9 Installing the Internal DSSI Cable

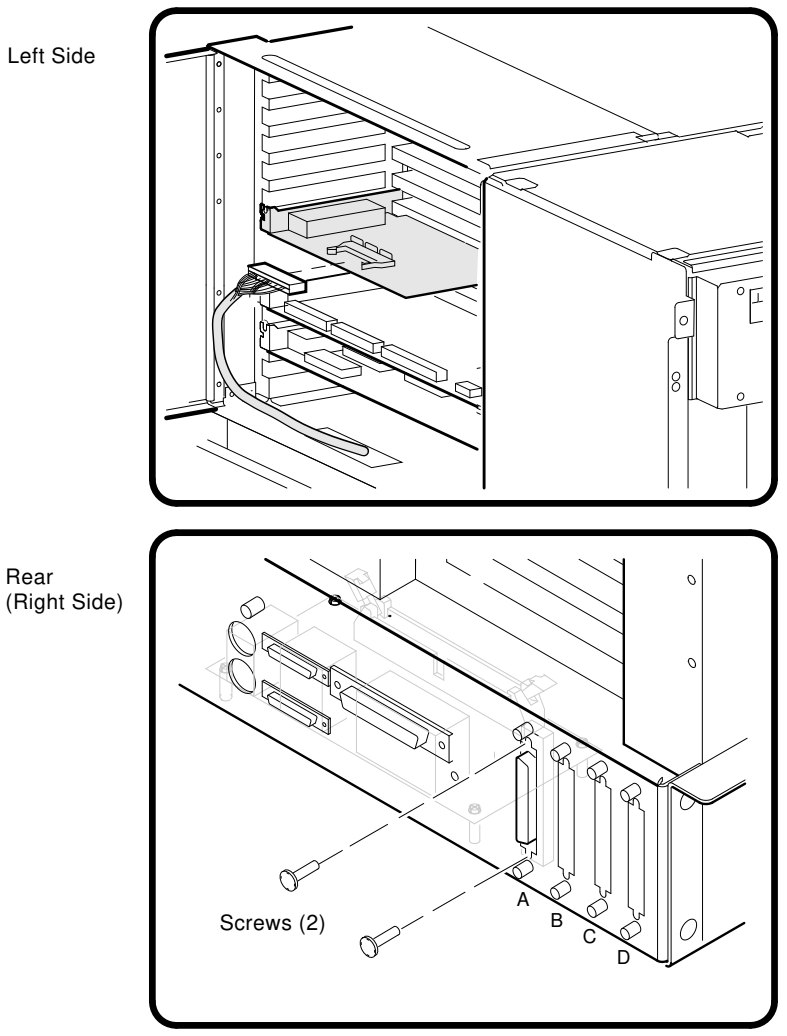

Power Supply Configurations

Warning

Before installing a power supply, turn off all power to the system (both ac and dc). Refer to the Turning the System Off section in Chapter 2 for information about turning off ac and dc power.

A second power supply can be added to the rackmount system to provide a redundant power supply (refer to Figure 4–10). With a redundant power supply, in most cases the failure of one power supply does not cause the system to shut down. Normal operation continues with no impact on the system.

Figure 4–10 Power Supply Configurations

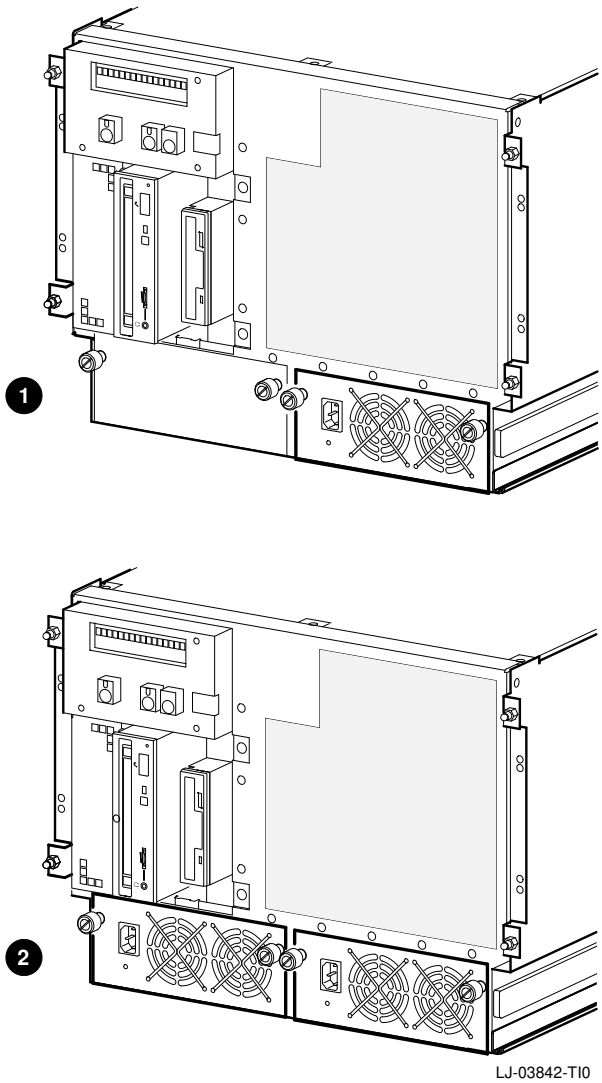

❶ System with a single power supply

❷ System with a redundant power supply

Installing the 2T-450HR Power Supply Kit

The 2T-450HR power supply kit is added to AlphaServer 2100 RM series systems to provide a redundant power supply. The 2T-450HR power supply kit consists of a power supply, a power cord, tie wraps, a multiple power cord warning label, and eight M5 Phillips-head screws.

Use the following procedure to install the 2T-450HR power supply kit:

1. Perform an orderly shutdown of the operating system and set the dc power switch on the operator control panel to off. Remove the front bezel and unplug all ac power cords from the AlphaServer 2100 RM series system.
2. Remove the four screws that secure the chassis to the rails and extend the chassis on its slides.
3. Loosen the two captive screws that secure the bottom access door ❶ and swing the door open (see Figure 4–11).
4. Loosen the two captive screws that secure the power supply compartment cover plate ❷ and remove the cover plate (see Figure 4–11).
5. While guiding the +3 V and +5 V power supply cables through the power supply compartment and out the back, slide the power supply ❸ into the power supply compartment (see Figure 4–11). Secure the power supply in place with the two captive screws on the front plate of the power supply.
6. Attach the warning label ❹ to the top surface of the chassis along the front edge (see Figure 4–11).

Figure 4–11 Installing the AlphaServer 2100 RM Series Power Supply

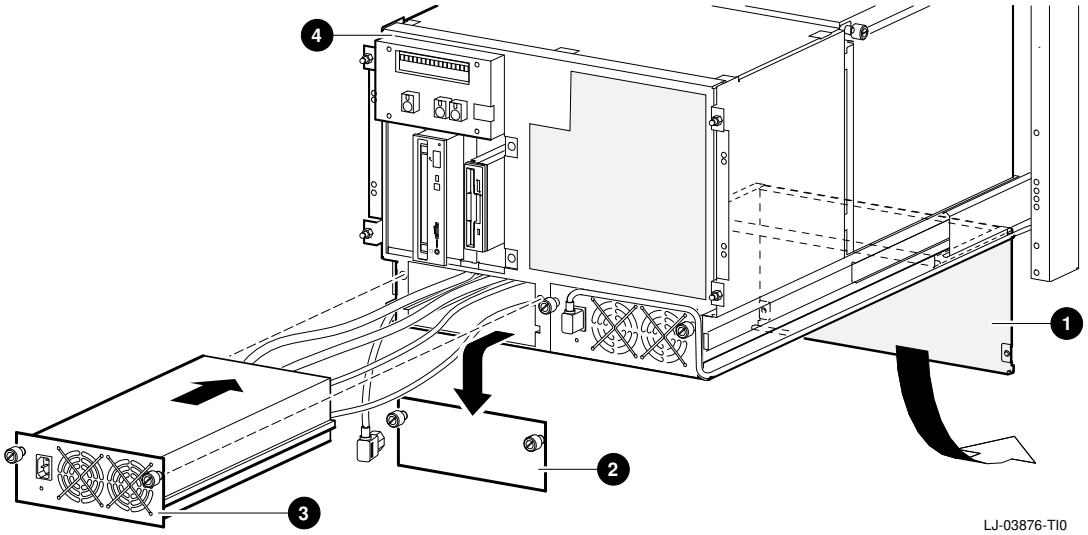

7. Access the bottom of the motherboard through the bottom access door and connect the extra power supply control cable ❺ and power supply 12 V cable ❻ to the proper connectors on the rear of the power supply (see Figure 4–12).

Figure 4–12 Connecting the 12 V and Power Supply Control Cables

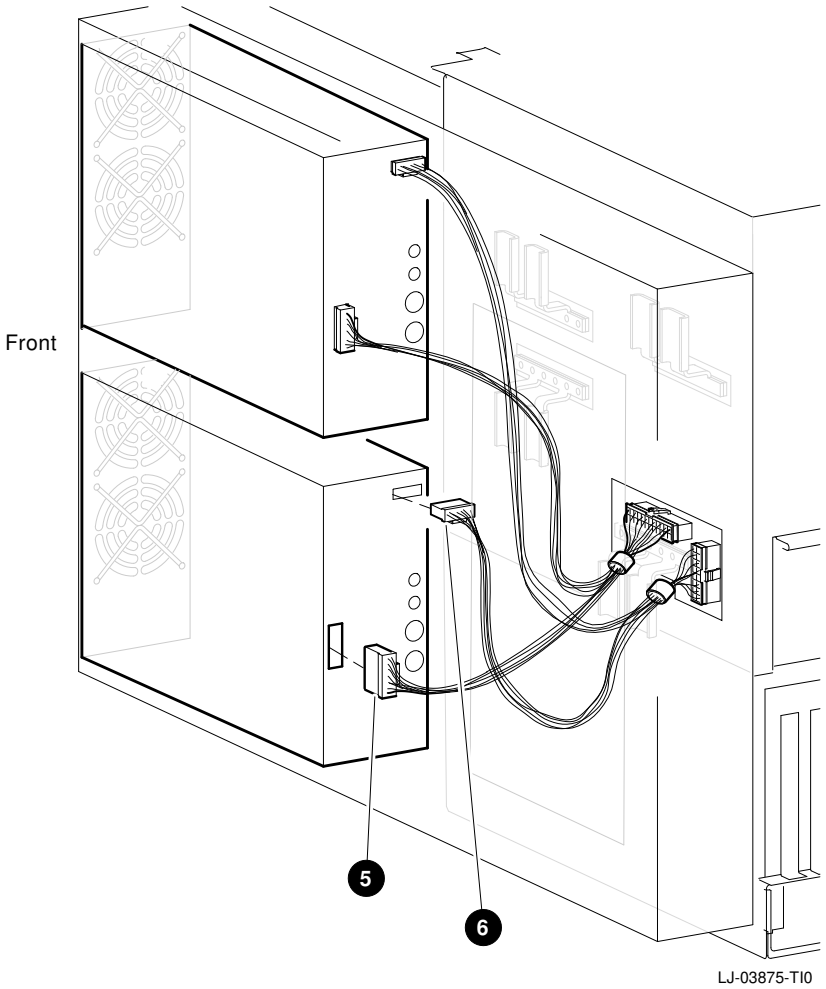

8. Using the M5 Phillips-head screws, connect the +3 V (small red cable) lead and 3 V RTN (small black cable) lead from the power supply to the available +3 V ❼ and 3 V RTN ❽ brackets on the bottom of the motherboard (see Figure 4–13).

9. Using the M5 Phillips-head screws, connect the +5 V (larger red cable) lead and 5 V RTN (larger black cable) lead from the power supply to the available +5 V ❾ and 5 V RTN ❿ brackets on the bottom of the motherboard (see Figure 4–13).
10. Close the bottom access door and secure it with the two captive screws.

Figure 4–13 Connecting the +3 V and +5 V Power Supply Leads

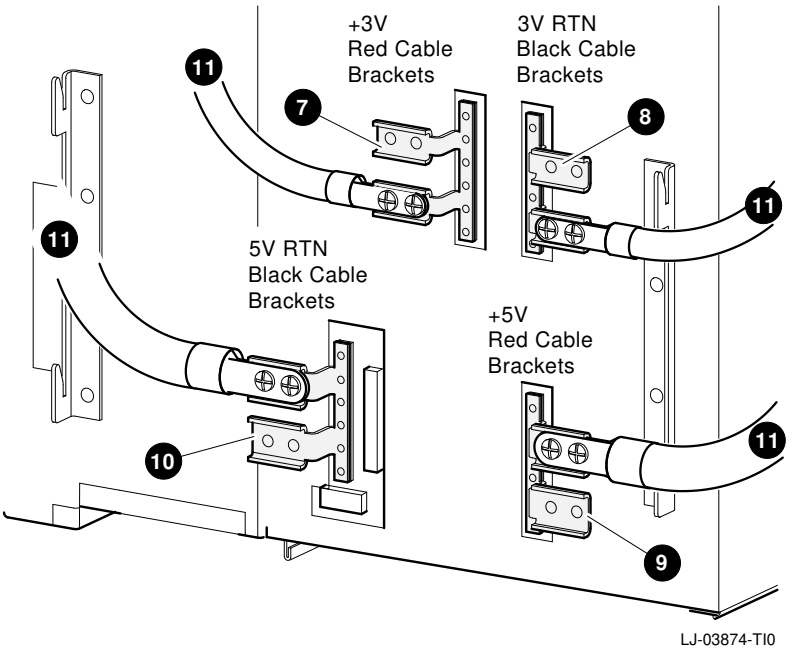

⓫ Power supply cables from the existing power supply

11. Loosen the two captive screws that secure the PCI/EISA compartment cover on the left side of the chassis and swing the cover open.
12. Install jumper J3 on the standard I/O module and then close the PCI/EISA compartment cover and secure it with the two captive screws (see Figure 4–14).

Figure 4–14 Jumper J3 Location on the Standard I/O Module

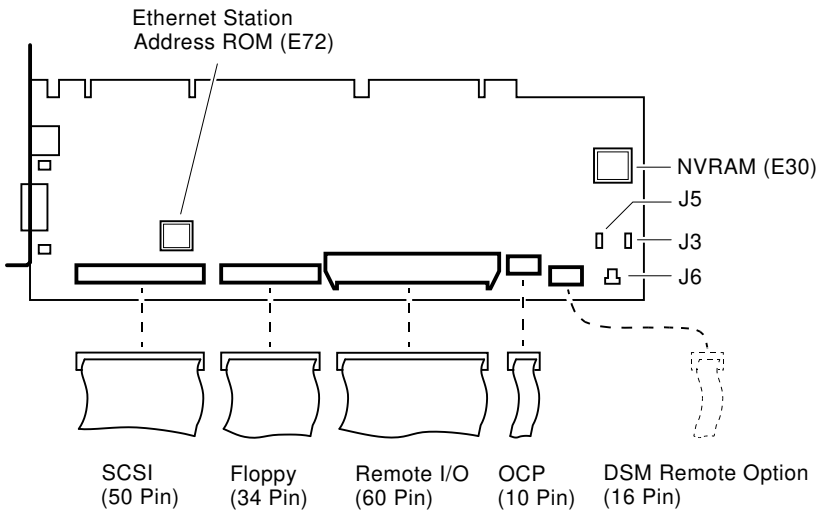

13. Attach the ac power cord to the left chassis tray using seven tie wraps. Ensure that there is enough slack left in the ac power cord so that it can be plugged into the ac connector on the front of the power supply.
14. Route the male plug end of the ac power cord through the notch in the side of the interlock actuator bracket and secure the ac power cord to the top surface of the interlock actuator bracket with a tie wrap through the two holes in the top of the bracket.

Caution

When securing the ac power cord to the interlock actuator bracket, ensure that the ac power cord is properly routed and secured to avoid the working area of the interlock actuator and the chassis slides.

15. Continue routing the male plug end of the ac power cord to the cable management brackets at the rear of the system.

16. Connect the ac power cord to the power controller.

Note

If two or more power controllers are available in the rear of the cabinet, ensure that the ac power cords from the two power supplies are plugged into *different* power controllers.

17. Slide the chassis back into the cabinet and secure it to the rails with the four screws removed in step 2.
18. Plug the ac power cords into the ac connectors on the front of the power supplies.
19. Replace the front bezel on the AlphaServer 2100 RM series system and set the dc power switch on the operator control panel to on.

Console Port Configurations

Power-up information is typically displayed on your console terminal. Your console terminal may be either a graphics terminal or a serial terminal (one that is connected to your system through the COM1 serial communication port). The setting of the `console` environment variable determines where the system displays power-up output. Set this environment variable according to the console terminal that you are using.

Synopsis:

set console output_device

Arguments:

graphics	Displays the power-up output to a graphics terminal or to a device connected to the VGA module at the rear of the system.
serial	Displays the power-up output to a device connected to the COM1 serial communication port at the rear of the system.

Example:

```
>>> set console serial
>>>
```

5

Troubleshooting the System

In This Chapter

This chapter provides troubleshooting information and covers the following topics:.

- Determining the Service Provider
- Task Overview
- Determining the Type of Problem
- Reporting Problems
- Power Problems
- Problems Getting to Console Mode
- Interpreting the OCP Power-Up/Diagnostic Display
- Console Reported Problems
- Mass-Storage Problems Indicated at Power-Up
- EISA Bus Problems Indicated at Power-Up
- PCI Bus Problems Indicated at Power-Up
- Boot Problems
- Operating System Reported Problems
- Fail-Safe Loader

Determining the Service Provider

Determine the Service Provider

Before servicing the system, be aware of any service agreement that exists for your system. The agreement helps determine the level of maintenance for self-maintenance customers.

- For self-maintenance customers, use the information in this chapter to help identify and resolve the problem. Refer to the *AlphaServer 2000/2100/2100 RM/2100 CAB Series Service Guide* for more comprehensive troubleshooting information.
- If there is a service agreement with Digital, contact your Digital service representative for assistance.

Considerations Before Troubleshooting

Before troubleshooting any system problem, check the site maintenance log for the system's service history. Be sure to ask the system manager the following questions:

- Has the system been used before and did it work correctly?
- Have changes to hardware or updates to firmware or software been made to the system recently?
- What is the state of the system—is the operating system running?

  If the operating system is down and you are not able to bring it up, use the console environment diagnostic tools, such as the power-up/diagnostic displays and ROM-based diagnostics (RBD)s.

  If the operating system is running, use the operating system environment diagnostic tools, such as error logs, crash dumps, and exercisers (DEC VET).

Identifying Problems

Table 5–1 lists ways to identify problems and indicates where each method is described.

Table 5–1 How to Identify a Problem

Method	Reference
Using the troubleshooting tables	This chapter
Running diagnostic tests	`test` command in the test section, or `show fru` command as shown in the Console Reported Problems section. Both are in this chapter.

Note

If you are running Windows NT, you must switch from the ARC to the SRM console before you can run the `test` command. For information about switching to the SRM console, refer to Chapter 5 in the *AlphaServer 2100 Series Owner's Guide*.

Task Overview

Identifying and Resolving Problems

Table 5–2 describes the steps required to identify and resolve system problems.

Table 5–2 Identifying and Resolving Problems

Step	Description
1	Determine the type of problem.
2	Locate the problem in the troubleshooting tables.
3	Follow the suggested actions to resolve the problem.
4	If necessary, run the diagnostic tests.
5	Contact your Digital service representative or other maintenance provider.

The next sections describe these steps in detail.

Determining the Type of Problem

Types of System Problems

Determine the type of problem that your system is experiencing from the list in Table 5–3.

Table 5–3 Problem Reference

Problem	Section
The system powers down unexpectedly or does not power up	Power Problems
The power-up screens are not displayed on the console terminal	Problems Getting to Console Mode
The power-up screens report an error or do not complete	Console Reported Problems
The system cannot find the boot device or the device does not boot	Boot Problems
The operating system startup screen does not appear, software applications do not run, or the operating system reports an error	Operating System Reported Problems

If the system has a problem that is not listed in Table 5–3 or the corrective actions in the troubleshooting tables do not resolve the problem, refer to the Reporting Problems section in this chapter.

Reporting Problems

Precall Checklist

If you are unable to locate the system problem as outlined in Table 5–3, or the corrective actions suggested in the troubleshooting tables in this chapter do not resolve the problem, contact the nearest Digital support center. Before calling to report a problem, complete the following steps:

1. Locate the part and serial numbers printed on the label at the rear of your system. Record these numbers on a copy of the AlphaServer 2100 RM Series Problem Worksheet in this chapter.

   The Digital support center will need this information when you call.

2. Fill in the Status of the System information on the worksheet.

3. Note the problem, any known possible causes, and the corrective actions suggested in the troubleshooting tables. Also indicate what corrective actions (if any) have already been taken to try to resolve the problem.

4. Be prepared to read information from the screen and to enter commands at the keyboard while you talk to the Digital support center representative.

Digital Support Center Contact Numbers

Table 5–4 lists the telephone numbers for contacting your Digital support center.

If your Digital support center number is not listed in Table 5–4, contact your local Digital office for assistance.

Table 5–4 Digital Support Centers

Country	Telephone Number
UNITED STATES	1-800-354-9000
Colorado Springs, CO	
From U.S./Canada/Mexico	719-592-7000
Shrewsbury, MA	
From U.S./Canada/Mexico	508-841-3700
Alpharetta, GA	
From U.S./Canada/Mexico	404-343-0000
AUSTRALIA	31-2-5615252
AUSTRIA	0222-86630-555
BELGIUM	02-7297744
CANADA	
English	1-800-267-5251
French	1-800-267-2603
DENMARK	80301005
FINLAND	90 9800 2878
FRANCE	1-69874123
GERMANY	01307702
HONG KONG	852-4149779
ISRAEL	052-592-300
ITALY	2-1678 20062
JAPAN (Tokyo)	
Trouble	0120-113035 (toll-free)
SPS Telephone Support	0120-113036 (toll-free)
Commodity Products Phone	0120-206042 (toll-free)
Special Account Customers	0120-113334 (toll-free)
Windows NT Hot Line	03-3207-2881

(continued on next page)

Table 5–4 (Cont.) Digital Support Centers

Country	Telephone Number
KOREA	82-2-7991114
MALAYSIA	60-3-2300111
MEXICO	520140810017
NETHERLANDS	030-832888
NORTHERN IRELAND	0232 381381
NORWAY	02-256300
PHILIPPINES	623-810-5156
PORTUGAL	
LISBON	01-3877051
OPORTO	02-6068805
PUERTO RICO	800-981-4764
REPUBLIC OF IRELAND	01-381216
SINGAPORE	330-6225
SPAIN	
MADRID	34-(9)1-5834257
BARCELONA	34-(9)3-4012222
SWEDEN	08-988835
THAILAND	66-254-8191
UNITED KINGDOM	025 6-59200

AlphaServer 2100 RM Series Problem Worksheet

DEC service representative telephone number: _____

Serial Number: _____

Status of the System (check all that apply):

_____ DC power light is not on

_____ OCP power/diagnostic display failure message

_____ Operating system fails to boot

_____ Console program fails to boot

_____ Console error message

_____ Diagnostic test error message

OCP powerup/diagnostic display:

_____

_____

Screen error message:

_____

_____

_____

_____

Troubleshooting notes:

_____

_____

_____

_____

_____

_____

_____

LJ-03805-TI0D

Power Problems

This section describes how to troubleshoot the system when there is no power at the system enclosure or the power supply subsystem lights indicate power trouble.

Table 5–5 describes possible power problems and their corrective actions.

Table 5–5 Diagnostic Flow for Power Problems

Symptom	Corrective Action
The fans do not spin up when the ac power cable is plugged into the power supply.	Check the power source and the power cord. If there are two power supplies, make sure that both are plugged in.
AC power is present, as indicated by the spinning fans, but the system does not power on.	Check the DC On/Off button setting on the OCP.
	Check that the ambient room temperature is within the environmental specifications (10°C–40°C, 50°F–104°F).
The power supply shuts down after approximately ten (10) seconds.	Check to see if both 6.75-inch fans are operating. A failure of either 6.75-inch fan causes the system to shut down after approximately ten (10) seconds.

Problems Getting to Console Mode

This section describes how to troubleshoot the system when powering up the system, but the console terminal does not display the power-up screen.

Table 5–6 describes possible problems getting to console mode and their corrective actions.

Table 5–6 Diagnostic Flow for Problems Getting to Console Mode

Symptom	Corrective Action
The power-up screen is not displayed.	Check the power-up/diagnostic display on the OCP (refer to Table 5–7) for a failure during self-tests. Check that the keyboard and monitor are properly connected and powered on (refer to the Terminal Connections section in Chapter 2). If the power-up screen is not displayed, yet the system enters console mode, check that the console environment variable is set correctly. If a VGA console terminal is used, set the variable to graphics. If a serial terminal is used, set the variable to serial. If `console` is set to serial, the power-up screen is routed to the COM1 serial communication port (refer to the `set console` command in Chapter 4 in the *AlphaServer 2100 Series Owner's Guide*) and cannot be viewed from the VGA monitor. Try connecting a console terminal to the COM1 serial communication port (refer to the Terminal Connections section in Chapter 2). If necessary use a 9-pin connector. Check the baud rate setting for the console terminal and system. The system baud rate setting is 9600. When using the COM1 port, set the `console` environment variable to ''serial''.

Interpreting the OCP Power-Up/Diagnostic Display

Table 5–7 describes how to interpret messages that may be displayed on the power-up/diagnostic display located on the operator control panel on the front of the system (shown in Figure 3–1).

Table 5–7 Interpreting the OCP Power-Up/Diagnostic Display

Message	Meaning
TEST	This is displayed while the system performs diagnostic tests and exercisers. The type of module under test, its slot number, and the currently executing test number are also displayed.
FAIL	If an error is detected, a failure message is displayed (and the Halt button LED lights) for a few seconds. The error is logged to the appropriate module via the serial control bus. In nearly all cases, the power-up tests continue. The module type and the slot number for the field replaceable unit (FRU) that failed, along with the test number that detected the error, are also displayed. The module types and slot numbers are as follows: CPU*nn* — CPU modules (0–3) MEM*nn* — Memory modules (0–3) I/O_0 — Standard I/O module I/O_1 — Extended I/O module (PCI) PCI*nn* — PCI modules (0–2) EISA*nn* — EISA modules (1–8) MBD — Motherboard
CPU STATUS	Summary of CPU testing—The status of each CPU from right to left, starting with CPU0 is displayed: ‘‘P’’ — CPU passed ‘‘F’’ — CPU failed ‘‘–’’ — CPU not present
STARTING CPU #	The console is starting the primary CPU.
SYSTEM RESET	The Reset button has been pressed.

(continued on next page)

Table 5–7 (Cont.) Interpreting the OCP Power-Up/Diagnostic Display

Message	Meaning
Alpha AXP *nnn*MHz	When the system is under operating system control, the CPU speed is displayed unless your own text is supplied using the ocp_text environment variable.

Console Reported Problems

This section describes how to troubleshoot the system when self-tests do not complete or when error messages are displayed on your console terminal in console mode.

Table 5–8 describes possible problems reported by the console program and their corrective actions.

Table 5–8 Diagnostic Flow for Problems Reported by the Console Program

Symptom	Corrective Action
The power-up tests do not complete.	Use the power-up/diagnostic display on the OCP (refer to Table 5–7).
The system powers up to the `ash>` prompt.	Reinstall the firmware. Refer to the firmware update documentation for firmware installation instructions. Contact your Digital support center if there is no backup copy of the firmware.
The console program reports an error.	Use the power-up/diagnostic display on the OCP (refer to Table 5–7) to determine the error.
• The OCP displays failure message at power-up	Use the `show fru` command described in the next section to see if errors have been logged.
• The Halt button LED lights during power-up	Examine the console event log (enter the `cat el` command) or power-up screens to check for embedded error messages recorded during power-up.
• The power-up screen includes error messages	If the power-up screens or the console event log indicate problems with mass-storage devices, or if the storage devices are missing from the `show config` display, use the troubleshooting flowcharts (refer to Table 5–9 and Table 5–10) to determine the problem.
	If the power-up screens or the console event log indicate problems with the EISA devices, or if the EISA devices are missing from the `show config` display, use the troubleshooting flowchart (refer to Table 5–11) to determine the problem.

(continued on next page)

Table 5–8 (Cont.) Diagnostic Flow for Problems Reported by the Console Program

Symptom	Corrective Action
	If the power-up screens or the console event log indicate problems with the PCI devices, or if the PCI devices are missing from the `show config` display, use the troubleshooting flowchart (refer to Table 5–12) to determine the problem. Run the `test` command (refer to the test section in this chapter) to verify the problem.

show fru

The `show fru` command reports module and error information for the following field replaceable units based on the serial control bus EEPROM data:

- CPU modules
- Memory modules
- I/O modules

For each of the above modules, the slot position, option, part, revision, and serial numbers, as well as any reported symptom-directed diagnostics (SDD) and test-directed diagnostics (TDD) event logs are displayed.

In addition, installed PCI and EISA modules are displayed with their respective slot numbers.

Synopsis:

show fru

Examples:

```
P00>>> show fru
  ❶    ❷      ❸              ❹        ❺              ❻
                               Rev                    Events logged
 Slot   Option  Part#          Hw Sw   Serial#         SDD     TDD
   0    I/O     B2110-AA       C4 0    KA349EVM30      00      00
   1    CPU2    B2020-AA       A3 0    ML33800033      00      00
   2    CPU0    B2020-AA       A3 0    ML33900059      00      00
   3    CPU1    B2020-AA       A3 0    ML33800035      00      00
   5    CPU3    B2020-AA       A3 0    ML33900050      00      00
   6    MEM2    B2021-BA       A0 0    GA33602844      00      00

  PCI  Bus
Hose    Slot    Option Name
  0       8      NCR 53C810

  EISA Bus
Hose    Slot    Option Name
  1       1      MLX0075
  1       2      DEC2E00
  1       3      CPQ3011
  1       5      DEC4220
  1       6      MLX0072
P00>>>
```

❶ System bus slot number for module (slots 1–7 top to bottom)

- Slot 0: Standard I/O module (dedicated EISA/PCI card-cage slot)
- Slot 1–3, 5: CPU modules

- Slot 4–7: Memory modules

❷ Option name (I/O, CPU#, or MEM#)

❸ Part number of option

❹ Revision numbers (hardware and firmware)

❺ Serial number

❻ Events logged:

Numbers other than ‘‘00’’ indicate that errors have been logged.

- SDD: Number of symptom-directed diagnostic events logged by the operating system, or in the case of memory, by the operating system and firmware diagnostics.
- TDD: Number of test-directed diagnostic events logged by the firmware diagnostics.

test

The `test` command runs firmware diagnostics for the entire ‘‘core’’ system. The tests are run sequentially and the status of each subsystem test is displayed on the console terminal as the tests progress. If a particular device is not available to test, a message is displayed.

Note

By default, no write tests are performed on disk and tape drives. Media must be installed to test the floppy drive and tape drives.

The `test` script tests devices in the following order:

1. Memory tests (one pass)
2. Read-only tests: DK* disks, DR* disks, DU* disks, MK* tapes, DV* floppy
3. Console loopback tests if lb argument is specified: COM2 serial port and parallel port

4. VGA console tests—These tests are run only if the VGA terminal is not used as the console terminal; that is, the console environment variable is set to ‘‘serial’’.
5. Network external loopback tests for EWA0—This test requires that the Ethernet port be terminated or connected to a live network, otherwise, the test will fail.

Synopsis:

test [lb]

Arguments:

[lb]	The loopback option includes console loopback tests for the COM2 serial port and the parallel port during the test sequence.

Examples:

```
>>> test
 2:32:12  March 4, 1994
Testing the Memory
Testing the DK* Disks(read only)
dkb600.6.0.2.1 has no media present or is disabled via the RUN/STOP
switch
file open failed for dkb600.6.0.2.1
No DR* Disks available for testing
Testing the MK* Tapes(read only)
Testing the DV* Floppy Disks(read only)
file open failed for dva0.0.0.0.1
Testing the VGA(Alphanumeric Mode only)
Testing the EW* Network
 2:33:15  March 4, 1994
>>>
```

Mass-Storage Problems Indicated at Power-Up

Mass-storage failures at power-up are usually indicated by read fail messages. Other problems can result in storage devices missing from the `show config` display.

Table 5–9 provides information for troubleshooting fixed-media mass-storage problems indicated at power-up.

Table 5–10 provides information for troubleshooting removable-media mass-storage problems indicated at power-up.

Use these tables to diagnose the likely cause of the problem.

Table 5–9 Fixed-Media Mass-Storage Problems

Problem	Symptom	Corrective Action
A drive failure	The fault LED for the drive is on (steady).	Replace the drive.
There are duplicate SCSI ID(s) (when removable-media bus is extended to StorageWorks shelf)	The drives with duplicate SCSI IDs are missing from the `show config` display.	Correct the removable-media SCSI IDs.
The SCSI ID(s) is set to 7 (reserved for host ID)	The valid drives are missing from the `show config` display. One drive may appear seven (7) times on the `show config` display.	Correct the SCSI IDs.
There are duplicate host ID(s) on a shared bus.	The valid drives are missing from the `show config` display. One drive may appear seven (7) times on the `show config` display.	Change the host ID(s) using the `set pk*0_host_id` command described in Chapter 4 in the *AlphaServer 2100 Series Owner's Guide*.
An I/O module failure (if removable-media bus is extended to StorageWorks shelf) or PCI or EISA storage adapter option failure	Problems persist after eliminating the previous problem sources.	Replace the standard I/O or storage adapter module.

Table 5–10 Removable-Media Mass-Storage Problems

Problem	Symptom	Corrective Action
A drive failure	The fault LED for the drive is on (steady).	Replace the drive.
There are duplicate SCSI ID(s)	The drives with duplicate SCSI IDs are missing from the `show config` display.	Correct the SCSI IDs.
The SCSI ID(s) is set to 7 (reserved for host ID)	The valid drives are missing from the `show config` display. One drive may appear seven (7) times on the `show config` display.	Correct the SCSI IDs.
There are duplicate host ID(s) on a shared bus	The valid drives are missing from the `show config` display. One drive may appear seven (7) times on the `show config` display.	Change the host ID(s) using the `set pk*0_host_id` command described in Chapter 4 in the *AlphaServer 2100 Series Owner's Guide*.
There are missing or loose cables	The activity LEDs do not come on. The drive is missing from the `show config` display.	Remove the device and inspect the cable connections.
A terminator(s) is missing	There are read/write errors in the console event log; the storage adapter port may fail.	Attach terminators as needed: internal SCSI terminator (12-41296-01) or external SCSI terminator (12-37004-04).
There is an extra terminator(s)	Devices produce errors or device IDs are dropped.	Check that only the beginning and the end of the SCSI bus is terminated. Remove the unnecessary terminators.
There is an I/O module failure	Problems persist after eliminating the previous problem sources.	Replace the standard I/O module.

EISA Bus Problems Indicated at Power-Up

EISA bus failures at power-up are usually indicated by the following messages displayed during power-up:

```
EISA Configuration Error. Run the EISA Configuration
Utility.
```

Run the ECU (refer to the Configuring EISA and ISA Options section in Chapter 4) when such a message is displayed. Other problems are indicated by EISA devices missing from the `show config` display.

Table 5–11 provides information for troubleshooting EISA bus problems that persist after running the ECU. Use Table 5–11 to diagnose the likely cause of the problem.

Table 5–11 EISA Troubleshooting

Step	Corrective Action
1	Confirm that the EISA module and any cabling are properly seated.
2	Run the ECU to: • Confirm that the system has been configured with the most recently installed controller. • See what the hardware jumper and switch setting should be for each ISA controller. • See what the software setting should be for each ISA and EISA controller. • See if the ECU deactivated (<>) any controllers to prevent a conflict. • See if any controllers are locked (!), which limits the ECU's ability to change resource assignments.
3	Confirm that the hardware jumpers and switches on ISA controllers reflect the settings indicated by the ECU. Start with the last ISA module installed.
4	Check for a bad slot by moving the last installed controller to a different slot.
5	Call the option manufacturer or the Digital support center for help.

Additional EISA Troubleshooting Tips

The following tips can aid in isolating EISA bus problems:

- Peripheral device controllers need to be seated (inserted) carefully, but firmly, into their slot to make all necessary contacts. Improper seating is a common source of problems for EISA modules.
- The CFG files supplied with the option that you want to install may not work on AlphaServer 2100 systems. Some CFG files call overlay files that are not required on this system or may reference inappropriate system resources, for example, BIOS addresses. Contact the option vendor to obtain the proper CFG file.
- Peripherals cannot share direct memory access (DMA) channels. Assignment of more than one peripheral to the same DMA channel can cause unpredictable results or even loss of function of the EISA module.
- Systems running Windows NT can assign shared interrupt lines (IRQs). DEC OSF/1 and OpenVMS do not allow shared interrupts.
- Not all EISA products work together. EISA is an open standard, and not every EISA product or combination of products can be tested. Violations of specifications may not matter in some configurations, but do matter in others.

  Manufacturers of EISA options often test the most common combinations and may have a list of ISA and EISA options that do not function in combination with particular systems. Be sure to check the documentation or contact the option vendor for the most up-to-date information.
- EISA systems will not function unless they are first configured using the ECU.
- The ECU will not notify you if the configuration program diskette is write-protected when it attempts to write the system configuration file (system.sci) to the diskette.

PCI Bus Problems Indicated at Power-Up

PCI bus failures at power-up are usually indicated by the inability of the system to see the device. Use Table 5–12 to diagnose the likely cause of the problem.

Table 5–12 PCI Troubleshooting

Step	Corrective Action
1	Confirm that the PCI module and any cabling are properly seated.
2	Check for a bad slot by moving the last installed controller to a different slot.
3	Call the option manufacturer or the Digital support center for help.

Boot Problems

This section describes how to troubleshoot problems that occur while the system is booting the operating system software.

Table 5–13 describes possible problems during booting and their corrective actions.

Table 5–13 Diagnostic Flow for Boot Problems

Symptom	Corrective Action
The system cannot find the boot device.	Check the system configuration for the correct device parameters (refer to the Verifying System Configuration section in Chapter 4) (node ID, device name, and so on) and the environment variables (refer to the boot section in Chapter 4 in the *AlphaServer 2100 Series Owner's Guide*), such as bootdef_dev, boot_file, and boot_osflags for DEC OSF/1 and OpenVMS; and FWSEARCHPATH, AUTOLOAD, and COUNTDOWN for Windows NT.
The device does not boot.	Run the `test` command (refer to the test section in this chapter) to check that the boot device is operating.

Operating System Reported Problems

This section describes how to troubleshoot system problems that occur while the operating system software is up and running.

Table 5–14 describes possible operating system problems and their corrective actions.

Table 5–14 Diagnostic Flow for Errors Reported by the Operating System

Symptom	Corrective Action
The system is hung or has crashed.	Examine the crash dump file. Refer to the *OpenVMS AXP Alpha System Dump Analyzer Utility Manual* for information on how to interpret OpenVMS crash dump files. Refer to the *Guide to Kernel Debugging* for information on using the DEC OSF/1 Krash Utility.
The operating system is up.	Have the Digital support center examine the operating system error log files to isolate the problem. Self-maintenance customers can refer to the *AlphaServer 2000/2100/2100 RM/2100 CAB Series Service Guide*. If the problem occurs intermittently, have the Digital support center run an operating system exerciser, such as the DEC VET, to stress the system. Refer to the *DEC Verifier and Exerciser Tool User's Guide* for instructions on running DEC VET.

Fail-Safe Loader

The fail-safe loader (FSL) allows you to power-up without initializing drivers running power-up diagnostics.

Note

The fail-safe loader should be used only when a failure at power-up prohibits you from getting to the console program. You cannot boot an operating system from the fail-safe loader.

If a checksum error is detected when loading the SRM console at power-up, the fail-safe loader is automatically loaded into memory and the system displays the FSL prompt `ash>`. If the system automatically powers up to the `ash>` prompt, reinstall the firmware according to the instructions provided with the firmware.

Whenever the fail-safe loader console is activated, the power-up/diagnostic display on the OCP displays a `FAIL I/O_00` message.

The FSL permits you to get to a console, with limited functionality, when one of the following is the cause of a problem getting to the console program under normal power-up:

- A power failure or accidental power-down during a firmware upgrade
- An error in the nonvolatile nvram file
- An incorrect environment variable setting
- A driver error

Note

The FSL program, indicated by the `ash>` prompt, has limited functionality (a simple shell is indicated by the letters ‘‘ash’’ contained in the console prompt).

Fail-Safe Loader Functions

From the FSL program, you can:

- Edit the nvram file (using the `edit` command).
- Assign a correct value to an environment variable (using the `show` and `set` commands).
- Start individual drivers using the `init -driver ew` command to start the Maintenance Operations Protocol (MOP) driver or `init -driver dv` to start the floppy driver. The `init -driver 6` command in FSL mode starts all available drivers.

Note

The nonvolatile file, nvram, is shipped from the factory with no contents. The customer can use the `edit` command to create a customized script or command file that is executed as the last step of every power-up.

Activating the Fail-Safe Loader

To activate the FSL, perform the following steps:

1. Install jumper J6 on the standard I/O module (refer to Figure 5–1). The jumper is stored on one of the pins of the J6 jumper.
2. Turn on the system.
3. Use the FSL program (indicated by the `ash>` prompt) to make corrections, edit the nvram file, set environment variables, or initialize phase 6 drivers.
4. When you have finished, power-down and remove the FSL jumper.

Figure 5–1 Fail-Safe Loader Jumper (J6) on the Standard I/O Module

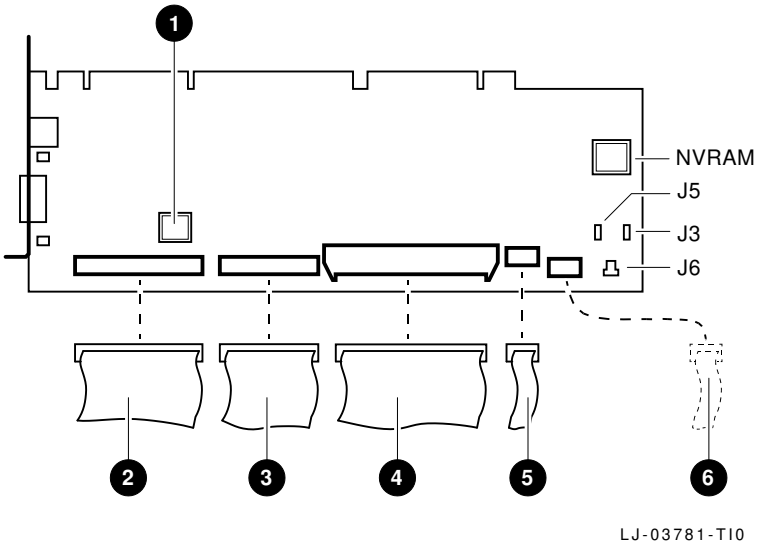

❶ Ethernet Address ROM (E72)

❷ SCSI (50-pin)

❸ Floppy (34-pin)

❹ Remote I/O (60-pin)

❺ OCP (10-pin)

❻ DSM Remote Option (16-pin)

Note

J3–Power supply mode: When installed, dual power supplies operate in redundant mode.

J5–Program voltage: Internal use only.

J6–Fail-Safe: When installed, selects the fail-safe loader firmware.

NVRAM–Nonvolatile random-access memory.

A

Hardware Specifications

In This Appendix

This appendix lists the hardware specifications for the AlphaServer 2100 RM series system.

This appendix covers the following topics:

- System Dimensions
- Electrical Specifications
- Environmental Conditions

System Specifications

System Dimensions

Table A–1 provides information about the rackmount system dimensions. The dimensions depend on if the system has the bezel for mounting into a cabinet with the English RETMA rail-hole pattern or the bezel for mounting into a cabinet with the metric RETMA rail-hole pattern.

Table A–1 Rackmount System Dimensions

Weight	Height	Width	Depth
System for Installation Into Cabinets with English RETMA Hole Pattern			
100 lb	14.0 in.	19.0 in.	27.75 in.
System for Installation Into Cabinets with Metric RETMA Hole Pattern			
45.4 kg	35.0 cm	45.0 cm	70.0 cm

Electrical Specifications

Table A–2 provides information about the various electrical specifications for the rackmount system. The same specifications apply to systems with one or two power supplies.

Table A–2 System Electrical Specifications

Input voltage	100-120 Vac/220-240 Vac with automatic voltage sensing
Input current (maximum)	10 A at 100-120 Vac 5 A at 220-240 Vac
Phasing	Single-phase
Frequency	50/60 Hz
Power (maximum)	1000 W input maximum, system only, power factor .98 minimum
U.S.A. power cord plug	NEMA 5-15P (Mates with receptacle NEMA 5-15R) for 120 V applications or NEMA 6-15P (Mates with receptacle NEMA 6-15R) for 240 V applications.

Environmental Conditions

Table A–3 provides information about the environmental conditions in which the rackmount server can operate.

Table A–3 System Environmental Conditions

Operating/Storage Conditions	
Temperature range	10°C to 40°C (50°F to 104°F)
Temperature change rate	11°C/hr (20°F/hr) maximum
Relative humidity	20% to 80% (noncondensing)
Maximum altitude	2,438 m (8,000 ft)
Note: The maximum allowable operating temperature above 2,438 m (8,000 ft) is reduced 1.8°C/1,000 m (1.0°F/1,000 ft)	
Maximum wet bulb temperature	28°C (82°F)
Minimum dew point	2°C (36°F)

Nonoperating Conditions	
Temperature range	-40°C to 66°C (40°F to 151°F)
Relative humidity	10% to 90% (noncondensing)
Maximum altitude	4,877 m (16,000 ft)

Index

64–bit PCI, 4–15

A

AC power connector
location of, 1–6
Access door
left side
location of, 1–10
Accessory kit
English RETMA
contents of, 2–9
Adapter
Fast SCSI-2, 4–30
Alignment
slides to cabinet, 2–27
ARC boot selections
managing of, 3–1
ARC firmware
using the, 3–1
ARC interface
switching to SRM from, 2–51
Attaching slides
rails, 2–23
Autoboot
DEC OSF/1, 2–56
OpenVMS, 2–56

B

Boot diagnostic flow, 5–26
Boot menu (ARC), 2–50
Boot problems
troubleshooting, 5–26
Boot procedure, 2–55
booting DEC OSF/1 automatically, 2–56
booting OpenVMS automatically, 2–56
Bus
expansion of, 2–40
system, 4–13
Buses, displaying
for OpenVMS, 4–6
for OSF/1, 4–6
Buses, displaying (SRM), 4–9

C

Cabinet
stability of, 2–18
Cable management system
cable routing guidelines, 2–36
installation of, 2–34
Cabling 3-channel RAID EISA controller, 4–31
Cabling DSSI adapters, 4–37
CFG files, 5–24
Checking content of shipment, 2–8
COM2 and parallel port
loopback tests, 5–17
Commands
to examine system configuration, 4–5
Compact disc drive
operation of, 3–1
Configuration
See ECU
EISA boards, 4–24
EISA/ISA boards, 4–26
of environment variables, 4–12

Configuration file (CFG), EISA and ISA, 4–20
Configuration rules
  removable-media, 4–33
Configuration, examining
  for DEC OSF/1, 4–5
  for OpenVMS, 4–5
  for Windows NT, 4–5
Considerations
  before troubleshooting, 5–2
Console
  diagnostic flow, 5–11
Console commands
  set bootdef_dev, 4–12
  set boot_osflags, 4–12
  set envar, 4–12
  show auto_action, 4–12
  show config, 4–6
  show device, 4–9
  show envar, 4–12
  show fru, 5–16
  show memory, 4–11
  test, 5–17
Console device, connecting, 2–64
Console mode
  defined, 2–60
  invoking, 2–60
  invoking remotely, 2–60
  invoking with Halt button, 2–60
  problems, troubleshooting, 5–11, 5–14
  prompt, 2–60
  troubleshooting, 5–14
Console output, 4–47
Console port configuration, 4–47
Console prompt, 2–60
  SRM console, 2–49
Console terminal, 2–60
Console, invoking
  See Console mode, 2–60
Consoles
  switching between ARC and SRM, 2–51
Controllers, displaying (SRM), 4–9
Controls, accessing, 1–5
CPU, 4–14
CPU module
  installation requirements, 4–14
  location of, 4–13
  SMP configuration and, 4–14
Customer support, 5–6, 5–7

D

DAT tape drive
  operation of, 3–1
DC On/Off button, 1–7, 3–3
DC On/Off light, 3–3
Device naming convention, 4–9
Devices, displaying
  for OpenVMS, 4–6
  for OSF/1, 4–6
Devices, displaying (SRM), 4–9
Diagnostic flow
  boot problems, 5–26
  console, 5–11
  console mode problems, 5–14
  errors reported by operating system, 5–27
  power problems, 5–10
  problems getting to console mode, 5–11
  problems reported by console, 5–14
Door, OCP
  opening of, 1–8
  unlocking of, 1–8
Dual power supply (redundant), 4–39

E

ECU
  actions after exiting, 4–23
  defined, 4–20
  invoking console firmware, 4–21
  procedure for running, 4–21
  procedures, 4–24
  starting up, 4–21
edit command, 5–29
EISA, 1–3

EISA boards
configuring, 4–24
EISA boards, identifying, 4–19
EISA bus
features of, 4–17
location of, 4–13
problems at power-up, 5–22
troubleshooting, 5–22
troubleshooting tips, 5–24
EISA configuration procedure, 4–24
EISA Configuration Utility
See ECU
EISA I/O boards
location of, 1–10
EISA/ISA boards
configuring, 4–26
EISA/ISA configuration procedure, 4–26
Enclosure, 1–3
English RETMA
rail-hole pattern, 2–19
Environment variables
configuring, 4–12
resetting, 2–51
setting and examining, 4–12
Errors
commands to report, 5–16
Ethernet
external loopback, 5–17
Extended I/O module, 4–15
location of, 4–13

F

Fail-safe loader, 5–28
activating, 5–28
power-up, 5–28
Fast SCSI-2 adapter, 4–30
Fixed-media
storage problems, 5–19
Floppy drive
operation of, 3–1
Front bezel
installation of, 2–68
FRUs
commands to report errors, 5–16

G

Guidelines
cable routing, 2–36

H

Halt button
invoking console mode with, 3–3
invoking operating system mode with, 3–3
location of, 1–7
Hangs
using Reset button to recover from, 3–4
Hardware specifications, A–1

I

I/O boards
EISA, location of, 1–10
PCI, location of, 1–10
I/O bus, EISA features, 4–17
I/O module, 4–16
init -driver command, 5–29
Installation
attaching the slides, 2–15, 2–23
cable management system, 2–34
checking content of shipment, 2–8
front bezel, 2–68
interlock actuator bracket, 2–29
interlock actuator latches, 2–31
keyboard/mouse extension cables, 2–38
power cords, 2–17
system slides, 2–11
tools required, 2–7
Installation area
English RETMA rail-hole pattern, 2–19
metric RETMA rail-hole pattern, 2–21
Interlock actuator bracket, installation of, 2–29

Interlock actuator latches, installation of, 2–31
Interlock system, 2–29
Internal SCSI bus, 4–30
Interrupt lines
and EISA, 5–24
IRQs
and EISA, 5–24
ISA boards, identifying, 4–19
ISA bus
defined, 4–18
ISA/EISA boards
configuring, 4–26
ISA/EISA configuration procedure, 4–26

K

Keyboard/mouse extension cables, installation of, 2–38

L

Loopback tests
COM2 and parallel ports, 5–17

M

Managing
ARC boot selections, 3–1
Mass storage
described, 4–30
problems, troubleshooting, 5–19, 5–21
Memory module
displaying information for, 4–11
location of, 4–13
variations of, 4–15
Memory, displaying (SRM), 4–11
Metric RETMA
rail-hole pattern, 2–21
Modem, connecting, 2–64
Modules
CPU, 4–14
Extended I/O, 4–15

N

Networks
connecting to, 2–62
Ethernet, 2–62
nvram file, 5–29

O

OCP
See Operator control panel
Operating system
boot failures, reporting, 5–27
preboot tasks, 2–51
Operating system problems
troubleshooting, 5–27
Operating system, booting, 2–55
Operating systems
switching, 2–54
Operation
compact disc drive, 3–1
DAT tape drive, 3–1
floppy drive, 3–1
QIC tape drive, 3–1
storage devices, 3–1
Operator control panel
controls
location of, 1–6
controls on, 1–7
DC On/Off button, 3–2
DC On/Off light, 3–2
display, interpreting, 5–12
Halt button, 3–3
Halt light, 3–3
location of, 1–6
power-up/diagnostic display, 3–2
Reset button, 3–4

P

PCI, 1–3
PCI bus
defined, 4–28
location of, 4–13
troubleshooting, 5–25

PCI I/O boards
location of, 1–10
Peripheral devices, connecting, 2–64
Phone numbers
customer support, 5–7
Power cords
installation of, 2–17
types of, 2–6
Power problems
troubleshooting, 5–10
Power requirements, 2–4
Power supplies
location of, 1–6
Power supply configurations, 4–39
Power-down procedure
turning off dc power, 2–57
Power-up display
interpreting, 5–12
Power-up sequence
mass-storage failures, 5–19
PCI failures, 5–25
Power-up/diagnostic display, 2–48
Printer, connecting, 2–64
Problem reporting, 5–6
Problems
See Troubleshooting
determining type, 5–5
identifying, 5–1, 5–4

Q

QIC tape drive
operation of, 3–1

R

Rail-hole pattern
English RETMA, 2–19
metric RETMA, 2–21
Rails
attaching slides to, 2–23
Reboot procedure, 2–55
Removable-media
storage problems, 5–21
Removable-media compartments
configuration rules, 4–33
Removable-media devices
SCSI support for, 4–30
Reset button
for recovering from hangs, 3–4
location of, 1–7

S

SCSI bus
expansion of, 2–40
internal, 4–30
Self-test status lights
location of, 1–7
Serial ports, 4–47
Set command (SRM), 4–12
Shipment
checking content of, 2–8
Show command (SRM), 4–12
show configuration command, 4–6
show device command (SRM), 4–9
show fru command (SRM), 5–16
show memory command (SRM), 4–11
Site preparation
verifying of, 2–2
Slides
alignment of, 2–27
preparation of, 2–11
SMP configuration
CPU modules, 4–14
Specifications
dimensions, A–2
electrical, A–3
environmental, A–4
SRM firmware
using the, 3–1
Stability
cabinet, 2–18
Standard I/O module, 4–16
Startup procedure
preboot tasks, 2–51
Storage devices
operation of, 3–1

Sysem Configuration Diskette, 4–20
System
before installing the, 2–1
configuration, examining, 4–5
expansion of SCSI, 2–40
slide mounting of, 2–25
turning off, 2–57
turning on, 2–42
System bus, location of, 4–13
System components
front, 1–6
System configuration, examining
for DEC OSF/1, 4–5
for OpenVMS, 4–5
for Windows NT, 4–5
System keys, locating, 1–5
System operation
boot, 2–55
reboot, 2–55
System slides
installation of, 2–11
System software
booting, 2–55
System startup screen, 2–48
SYSTEMCFG volume label, 4–20

T

Terminals, connecting, 2–66
test command, 5–17
Tools required, 2–7
Troubleshooting, 5–1
boot problems, 5–26
considerations before beginning, 5–2
console, 5–11
console mode problems, 5–14
EISA problems, 5–22
errors reported by operating system, 5–27
for self-maintenance customers, 5–2
interpreting the operator control panel power-up display, 5–12
mass-storage problems, 5–19
operating system problems, 5–27
PCI problems, 5–25
Troubleshooting (cont'd)
power problems, 5–10
problem reference, 5–5
problem worksheet, 5–9
problems getting to console mode, 5–11
problems reported by the console, 5–14
reporting problems, 5–6
task overview, 5–4
test command, 5–2

U

Using firmware
ARC, 3–1
SRM, 3–1

V

VGA monitor, connecting, 2–66
VT terminal, connecting, 2–66

Reader's Comments

AlphaServer 2100 RM Series
Installation/Owner's Guide

EK-KN450-RM. B01

Your comments and suggestions help us improve the quality of our publications.

Thank you for your assistance.

I rate this manual's:	Excellent	Good	Fair	Poor
Accuracy (product works as manual says)	☐	☐	☐	☐
Completeness (enough information)	☐	☐	☐	☐
Clarity (easy to understand)	☐	☐	☐	☐
Organization (structure of subject matter)	☐	☐	☐	☐
Figures (useful)	☐	☐	☐	☐
Examples (useful)	☐	☐	☐	☐
Index (ability to find topic)	☐	☐	☐	☐
Page layout (easy to find information)	☐	☐	☐	☐

I would like to see more/less _____

_____

What I like best about this manual is _____

_____

What I like least about this manual is _____

_____

I found the following errors in this manual:

Page Description

_____ _____

_____ _____

_____ _____

Additional comments or suggestions to improve this manual:

_____

_____

_____

For software manuals, please indicate which version of the software you are using: _____

_____

Name/Title _____ Dept. _____

Company _____ Date _____

Mailing Address _____

_____ Phone _____

Do Not Tear – Fold Here and Tape

digital™

No Postage
Necessary
If Mailed
in the
United States

BUSINESS REPLY MAIL

FIRST CLASS PERMIT NO. 33 MAYNARD MASS.

POSTAGE WILL BE PAID BY ADDRESSEE

DIGITAL EQUIPMENT CORPORATION
Shared Engineering Services
DIGITAL DRIVE MKO1–2/E12
PO BOX 9501
MERRIMACK, NH 03054–9982

Do Not Tear – Fold Here