AlphaServer 2100A RM Series

Installation/Owner's Guide

Order Number: EK-2100A-RM. A01

First Printing, December 1995

Digital Equipment Corporation makes no representations that the use of its products in the manner described in this publication will not infringe on existing or future patent rights, nor do the descriptions contained in this publication imply the granting of licenses to make, use, or sell equipment or software in accordance with the description.

Possession, use, or copying of the software described in this publication is authorized only pursuant to a valid written license from Digital or an authorized sublicensor.

© Digital Equipment Corporation 1995. All Rights Reserved.

The following are trademarks of Digital Equipment Corporation: AlphaGeneration, AlphaServer, DEC, Digital, OpenVMS, ThinWire, VT, the AlphaGeneration logo, and the DIGITAL logo.

PostScript is a registered trademark of Adobe Systems, Inc. UNIX is a registered trademark in the United States and other countries licensed exclusively through X/Open Company Ltd. Microsoft Windows and Microsoft Windows NT are trademarks of Microsoft Corporation.

All other trademarks and registered trademarks are the property of their respective holders.

FCC NOTICE: This equipment has been tested and found to comply with the limits for a Class A digital device, pursuant to Part 15 of the FCC Rules. These limits are designed to provide reasonable protection against harmful interference when the equipment is operated in a commercial environment. This equipment generates, uses, and can radiate radio frequency energy and, if not installed and used in accordance with the instruction manual, may cause harmful interference to radio communications.

Any changes or modifications made to this equipment may void the user's authority to operate this equipment.

Operation of this equipment in a residential area may cause interference in which case the user at his own expense will be required to take whatever measures may be required to correct the interference.

This document was prepared using VAX DOCUMENT Version 2.1.

EC:

Warning! This is a Class A product. In a domestic environment this product may cause radio interference in which case the user may be required to take adequate measures.

Achtung! Dieses ist ein Gerät der Funkstörgrenzwerklasse A. In Wohnbereichen können bei Betrieb dieses Gerätes Rundfunkstörungen auftreten, in welchen Fällen der Benutzer für entsprechende Gegenmaßnahmen verantwortlich ist.

Attention! Ceci est un produit de Classe A. Dans un environnement domestique, ce produit risque de créer des interférences radioeléctriques, il appartiendra alors à l'utilisateur de prendre les mesures spécifiques appropriées.

ACOUSTICS: Preliminary declared values per ISO 9296 and ISO 7779:

	Sound Power Level L_{wAd}, B	**Sound Pressure Level L_{pAm}, dBA (Bystander Positions)**
Idle	6.5	50
Operating	6.5	50

Current values for specific configurations are available from Digital representatives. 1 B = 10 dBA.

SCHALLEMISSIONSWERTE: Verläufige Werteangaben nach ISO 9296 und ISO 7779/DIN EN27779 (10 March 1994):

	Schalleistungspegel L_{wAd}, B	**Schalldruckpegel L_{pAm}, dBA (Zuschauerpositionen)**
Leerlauf	6.5	50
Betrieb	6.5	50

Aktuelle Werte für spezielle Ausrüstungsstufen sind über die Digital Equipment Vertretungen erhältlich. 1 B = 10 dBA.

この装置は，第一種情報装置（商工業地域において使用されるべき情報装置）で商工業地域での電波障害防止を目的とした情報処理装置等電波障害自主規制協議会（VCCI）基準に適合しております。

従って，住宅地域またはその隣接した地域で使用すると，ラジオ，テレビジョン受信機等に受信障害を与えることがあります。

取扱説明書に従って正しい取り扱いをして下さい。

Für Bundesrepublik Deutschland
For Federal Republic of Germany
Pour la République féderale d'Allemagne

Hochfrequenzgerätezulassung und Betriebsgenehmigung

Bescheinigung des Herstellers/Importeurs:
Hiermit wird bescheinigt, daß die Einrichtung in Übereinstimmung mit den Bestimmungen der DBP-Verfügung 523/1969, Amtsblatt 113/1969, und Grenzwertklasse "A" der VDE0871, funkentstört ist.

Das Bundesamt für Zulassungen in der Telekommunikation (BZT), hat diesem Gerät eine EMV-Zulassungsnummer zugeteilt.

Betriebsgenehmigung:
Hochfrequenzgeräte dürfen erst in Betrieb genommen werden, nachdem hierfür von der für den vorgesehenen Aufstellungsort zuständigen Außenstelle des Bundesamtes für Post und Telekommunikation (BAPT) die Genehmigung erteilt ist.

Als Antrag auf Erteilung einer Genehmigung dient eine Anmeldepostkarte (Anhang des Handbuches) mit Angabe der EMV-Zulassungsnummer.

Der untere Teil der Anmeldepostkarte ist vom Betreiber zu vervollständigen und an die örtliche Außenstelle des Bundesamtes für Post und Telekommunikation (BAPT) zu schicken. Der obere Teil bleibt beim Gerät.

Betreiberhinweis:
Das Gerät wurde funktechnisch sorgfältig entstört und geprüft. Die Kennzeichnung mit der Zulassungsnummer bietet Ihnen die Gewähr, daß dieses Gerät keine anderen Fernmeldeanlagen einschließlich Funkanlagen stört.

Sollten bei diesen Geräten ausnahmsweise trotzdem, z.B. im ungünstigsten Fall beim Zusammenschalten mit anderen EDV-Geräten, Funkstörungen auftreten kann das im Einzelnen zusätzliche Funkentstörungsmaßnahmen durch den Benutzer erfordern.

Bei Fragen hierzu wenden Sie sich bitte an die örtlich zuständige Außenstelle Ihres Bundesamtes für Post und Telekommunikation (BAPT).

Externe Datenkabel:
Sollte ein Austausch der von Digital spezifizierten Datenkabel nötig werden, muß der Betreiber für eine einwandfreie Funkentstörung sicherstellen, daß Austauschkabel im Aufbau und Abschirmqualität dem Digital Originalkabel entsprechen.

Kennzeichnung:
Die Geräte werden bereits in der Fertigung mit der Zulassungsnummer gekennzeichnet und mit einer Anmeldepostkarte versehen. Sollte Kennzeichnung und Anmeldepostkarte übergangsweise nicht mit ausgeliefert werden kontaktieren Sie bitte das nächstgelegene Digital Equipment Kundendienstbüro.

Contents

Preface xiii

1 Components and Controls

In This Chapter 1–1
AlphaServer 2100A RM System 1–1
AlphaServer 2100A CAB System 1–2
Characteristics 1–4
Components and Controls 1–5
Location 1–5
Components: Front of System 1–6
Operator Control Panel 1–7
Operator Control Panel Door 1–10
Components: Top of System 1–11
Components: Left Side of System 1–12
Components: Rear of System 1–13
Components: Bottom of System 1–14

2 Hardware Specifications

In This Chapter 2–1
System Architecture 2–2
Jumpers and Switches on System Backplane 2–3
System Specifications 2–4
Rackmount System Dimensions 2–4
Electrical Specifications 2–5
Environmental Conditions 2–8
Power Requirements 2–10
Power Cords 2–12
Power Controllers for CAB System 2–13

3 Installation

In This Chapter 3–1
Before Installing the System 3–2
Tools Required 3–2
Verifying the Site Preparation 3–3
Overview 3–3
Unpacking the Shipment 3–5
Checking the Shipment 3–5
Accessories 3–6
Installing the System Slides 3–8
Overview 3–8
Tools Required 3–8
Preparing the Slides 3–8
Attaching the Slide Races 3–12
Attaching the Power Cords 3–14
Cabinet Stability 3–15
Cabinet Rail-Hole Pattern (English RETMA) 3–16
Determining the Installation Area (English RETMA) 3–16
Cabinet Rail-Hole Pattern (Metric RETMA) 3–18
Determining the Installation Area (Metric RETMA) 3–18
Installing the U-Nuts 3–20
Attaching the Slides to the Cabinet Rails 3–20
Mounting the System on the Slides 3–22
Aligning the System Slides to the Cabinet Rails 3–24
Using the Interlock System 3–26
Installing the Interlock Actuator Bracket 3–26
Installing the Interlock Actuator Latches 3–28
Installing the Cable Management System 3–31
Cable Routing Guidelines 3–33
Installing Extender Cables 3–35
Expanding the System 3–38
Installing and Removing the Front Bezel 3–39

4 Setup and Basic Operation

In This Chapter 4–1
Connecting the Monitor or Terminal 4–2
Connecting the Keyboard and Mouse 4–2
ZLXp-E Graphics Accelerator (PBXGA) 4–4
Connecting Peripherals 4–5
Serial/Parallel Connections 4–5
Network Options 4–7

Turning the System On 4–8
Overview 4–8
Before You Begin 4–8
Checking the System Settings 4–9
Applying Power to the System 4–10
Displaying Power-Up Information 4–12
Checking the Diagnostic Indicators 4–13
Bootstrap Firmware 4–18
Turning Off the System 4–20
Before You Begin 4–20
Turning Off DC Power 4–20
Extended Power-Down (AC Power) 4–22
Console Mode 4–23
Invoking Console Mode 4–23
Remote Console Access 4–24

5 Configuring the System

In This Chapter 5–1
System Bus Options 5–2
CPU Modules 5–3
Memory Modules 5–4
SCSI Buses 5–5
Native SCSI Bus 5–5
Internal SCSI Cables for RAID or DSSI Controller 5–6
Installing a Cable Kit 5–6
Installing Removable Media Storage Devices 5–8
Installing a Hard-Disk Drive 5–10
Power Supply Configurations 5–12

6 Troubleshooting the System

In This Chapter 6–1
Before You Begin 6–2
Determine the Service Provider 6–2
Identifying Problems 6–2
Determining the Type of Problem 6–3
Types of System Problems 6–3
Reporting Problems 6–4
Precall Checklist 6–4
Digital Contact Information 6–4
Power Problems 6–6
Problems Getting to Console Mode 6–7

Interpreting the Operator Control Panel Power-Up/Diagnostic Display 6–8
CPU Failover 6–10
Fail-Safe Loader (FSL) 6–11
Console Reported Problems 6–14
show fru 6–15
test 6–17
Mass-Storage Problems Indicated at Power-Up 6–20
EISA Bus Problems Indicated at Power-Up 6–23
Additional EISA Troubleshooting Tips 6–25
PCI Bus Problems Indicated at Power-Up 6–26
Boot Problems 6–27
Operating System Reported Problems 6–28
Problems with RAID Devices 6–29

Index

Examples

4–1 Boot Menu Example 4–17

Figures

1–1 AlphaServer 2100A RM System 1–2
1–2 AlphaServer 2100A CAB System 1–3
1–3 Front Components 1–6
1–4 Operator Control Panel 1–7
1–5 Unlocking the OCP Door 1–10
1–6 Top Components 1–11
1–7 Left-Side Components 1–12
1–8 Rear Components 1–13
1–9 Bottom Access Door 1–14
2–1 AlphaServer 2100A RM Architecture 2–2
2–2 Locations of Jumpers and Switches 2–3
2–3 Power Requirements 2–11
3–1 System Clearance and Service Area 3–4
3–2 Attaching the Brackets to the Right Slide Assembly (English RETMA) 3–9
3–3 Attaching the Slide Races 3–13

3–4	Attaching the Power Cord	3–15
3–5	Installation Area and Mounting Holes (English RETMA)	3–17
3–6	Installation Area and Mounting Holes (Metric RETMA)	3–19
3–7	Attaching the Slides to the Cabinet Rails	3–21
3–8	Mounting the System on the Slides	3–23
3–9	Aligning the System Slides to the Cabinet Rails	3–25
3–10	Installing the Interlock Actuator Bracket	3–27
3–11	The Interlock System	3–30
3–12	Installing the Cable Management Brackets	3–32
3–13	Example of Cable Routing	3–34
3–14	Installing the Keyboard/Mouse/VGA Extender Cables	3–37
3–15	Optional SCSI RAID and/or DSSI Breakout Ports	3–38
3–16	Installing/Removing the Front Bezel	3–40
4–1	Connecting Monitor, Keyboard, and Mouse	4–3
4–2	Connecting Serial and Parallel Devices	4–6
4–3	Ethernet Cable Connection	4–7
4–4	Powered-Down System Settings	4–9
4–5	Applying Power to the System	4–11
4–6	System Startup Diagnostic Indicators	4–13
4–7	Turning Off the System	4–21
4–8	Turning Off the AC Power	4–22
5–1	System Bus Option Locations	5–2
5–2	System Bus Configurations According to the Number of CPUs	5–4
5–3	Installing a Cable Kit	5–7
5–4	Installing Removable Media	5–9
5–5	Installing a Hard-Disk Drive	5–11
5–6	Power Supply Configurations	5–13
6–1	Location of FSL Switches	6–12

Tables

1–1	AlphaServer 2100A RM System Characteristics	1–4
2–1	Rackmount System Chassis Dimensions	2–4
2–2	Rackmount System Electrical Specifications	2–5
2–3	Cabinet System Electrical Specifications (60 Hz)	2–6
2–4	Cabinet System Electrical Specifications (50 Hz)	2–7
2–5	Rackmount System Environmental Conditions	2–8
2–6	Cabinet System Environmental Conditions	2–9
2–7	Power Cord Order Numbers	2–12
3–1	Rackmount System Accessory Kit (PN: 70-32506-01)	3–6
4–4	Interpreting Operator Control Panel Power-Up Display	4–14
6–1	Problem Reference	6–3
6–2	Troubleshooting Power Problems	6–6
6–3	Troubleshooting Problems Getting to Console Mode	6–7
6–4	Interpreting Operator Control Panel Power-Up Display	6–8
6–5	Troubleshooting Problems Reported by the Console Program	6–14
6–6	Fixed-Media Mass-Storage Problems	6–21
6–7	Removable-Media Mass-Storage Problems	6–22
6–8	EISA Troubleshooting	6–24
6–9	PCI Troubleshooting	6–26
6–10	Troubleshooting Boot Problems	6–27
6–11	Troubleshooting Errors Reported by the Operating System	6–28
6–12	Troubleshooting RAID Problems	6–29

Preface

Purpose of This Guide

This guide, along with the *AlphaServer 2100A Owner's Guide* and the *AlphaServer 2000/2100/2100A Firmware Reference Guide*, describes how to install, configure, and troubleshoot the AlphaServer 2100A RM series system.

This guide describes the components of the rackmount system drawer, installation of the drawer, configuration areas that differ from the AlphaServer 2100A pedestal system, and troubleshooting.

For information on installing an AlphaServer 2100A CAB system, refer to the *H9A10 (600 mm) Cabinet Installation Owner's Guide*.

Who Should Use This Guide

This guide is for Digital service personnel or qualified self-maintenance customers who are familiar with installing computer systems, and for system managers and others who perform system management tasks.

Organization of This Guide

This guide contains information about how to use your system to best advantage:

- Chapter 1 introduces the system and describes the components and controls.
- Chapter 2 describes the system specifications.
- Chapter 3 explains how to install the rackmount system drawer.
- Chapter 4 explains how to set up and operate the system hardware.
- Chapter 5 explains how to configure the system.
- Chapter 6 provides information for troubleshooting system problems.
- For a listing of terms used in the AlphaServer 2100A RM series system documentation, refer to the Glossary contained in the *AlphaServer 2100A Owner's Guide*.

Safety Symbols

Pay particular attention to the warning symbols that appear in this document. These symbols alert you to potential dangers.

This attention symbol is used to alert you to specific safety conditions. When this symbol appears on equipment, read the separate instructional material related to the condition being addressed.

Warning: CPU and memory modules have parts that operate at high temperatures. Wait two minutes after power is removed before handling these modules.

Warning: This area contains electrical energy. Disconnect the AC power cord(s) to the system before accessing this area.

Warning: High voltage shock hazard present inside the power supply.

Conventions Used in This Guide

This guide uses the following conventions:

Convention	Meaning
Note	A note calls the reader's attention to any item of information that may be of special importance.
Caution	A caution contains information essential to avoid damage to the equipment.
Warning	A warning contains information essential to the safety of personnel.
❶	Circled numbers provide a link between figures and text.
`MONOSPACE`	Text displayed on the screen is shown in monospace type.
bold type	Bold type denotes user input.
italic type	Italic type emphasizes important information, indicates variables, and indicates complete titles of manuals.
n.nn	A period in numerals signals the decimal point indicator. For example, *1.75* equals *one and three-fourths*.
Ctrl/*x*	Ctrl/*x* indicates that you hold down the Ctrl key while you press another key or mouse button (indicated here by *x*).
Return	Specific keys such as the Return key are represented in boxes.
x	A lowercase italic *x* indicates the generic use of a letter. For example, *xxx* indicates any combination of three alphabetic characters.
n	A lowercase italic *n* indicates the generic use of a number. For example, 19*nn* indicates a 4-digit number in which the last 2 digits are unknown.
[ ]	In format descriptions, brackets indicate optional elements. You can choose none, one or more, or all of the options.

Alpha Firmware Updates

An Alpha Firmware CD-ROM is shipped on an ‘‘as released’’ basis with the Digital UNIX, OpenVMS, and Windows NT operating systems. The Alpha firmware files can also be downloaded from the Internet as follows:

- ftp://ftp.digital.com/pub/Digital/Alpha/firmware/
- http://www.service.digital.com/alpha/server/firmware/

New versions of firmware released between shipments of the Alpha Firmware CD-ROM are available in an interim directory:

ftp://ftp.digital.com/pub/Digital/Alpha/firmware/interim/

ECU Revisions

The EISA Configuration Utility (ECU) is used for configuring EISA options and some ISA options on AlphaServer systems. The ECU is described in the *AlphaServer 2100A Owner's Guide*. Your AlphaSever 2100A RM computer came with an ECU kit, which includes the ECU license. Customers who already have the ECU and license, but need the latest revision of the ECU, can order a separate kit. Call 1-800-DIGITAL to order.

If you plan to migrate from Digital UNIX or OpenVMS to Windows NT, you must re-run the appropriate ECU. Failure to run the operating system specific ECU will cause system failure.

Digital UNIX Information

The following documents contain special instructions related to AlphaServer 2100A RM systems that run the Digital UNIX operating system. Be sure to read the documents for the version of the operating system shipped with your system.

- *Digital UNIX Release Notes*
- *Digital UNIX Installation Guide*

OpenVMS Patches

Software patches for the OpenVMS operating system are available from the World Wide Web as follows:

http://www.service.digital.com/html/patch_service.html

Choose the ‘‘Contract Access’’ option if you have a valid software service contract with Digital or you wish to become a software contract customer. Choose the ‘‘Public Access’’ option if you do not have a software service contract.

Related Documents

Other documents related to the AlphaServer 2100A RM series system include the following:

- *AlphaServer 2100A Owner's Guide* (EK-2100A-OP)
- *AlphaServer 2000/2100/2100A Firmware Reference Guide* (EK-AXPFW-RM)
- *H9A10 (600 mm) Cabinet Installation Owner's Guide* (EK-H9A10-IN)
- *AXP Systems DSSI VMScluster Installation and Troubleshooting* (EK-410AB-MG)
- *AlphaServer 2000/2100/2100A RM/2100A CAB Series Service Guide* (EK-2100A-SV)
- *OpenVMS AXP Alpha System Dump Analyzer Utility Manual*
- *Guide to Kernel Debugging* (AA-PS2TA-TE)
- *DEC Verifier and Exerciser Tool User's Guide* (AA-PTTMA-TE)

Documents on the Internet

You can download up-to-date files and late-breaking technical information for managing the AlphaServer 2100A RM and CAB systems from the Internet. Some key documents include the following:

- *Digital Systems and Options Catalog*—ftp://ftp.digital.com /pub/Digital/info/SOC/
- *Supported Options List*—ftp://ftp.digital/com/pub/Digital/ Alpha/systems/as2100a/docs/ or http://www.service.digital.com/alpha/server/as2100a/docs/
- *Microsoft Hardware Compatibility Lists*—ftp://ftp.digital.com /pub/Digital/Alpha/systems/as2100a/nt/
- *Wide SCSI Technical Bulletin*—http://www.service.digital.com /alpha/server/as2100a/docs/

1
Components and Controls

In This Chapter

This chapter introduces the AlphaServer 2100A RM and CAB series systems and the location of the system components and controls.

The AlphaServer 2100A RM and CAB systems are members of the AlphaServer 2100A product line. This product line is a family of Alpha symmetric multiprocessor, server systems that are supported by multiple operating systems: Digital UNIX, OpenVMS, and Windows NT. These server systems are suitable for several computing environments: general-purpose commercial, high-performance application and database, and PC LAN server.

AlphaServer 2100A RM System

The AlphaServer 2100A RM series system (Figure 1–1) is a high-performance server for multiuser environments. The system is contained in a slide-mounted chassis that fits into a standard 48.26-cm (19-in.) cabinet. The system complies with the Electronic Industries Association (EIA) standard 310C and the International Electrotechnical Commission (IEC) 297 standards that enable installation into a cabinet with rails with either the English RETMA (Radio Electronics Television Manufacturers Association) or metric RETMA rail-hole pattern.

Figure 1–1 AlphaServer 2100A RM System

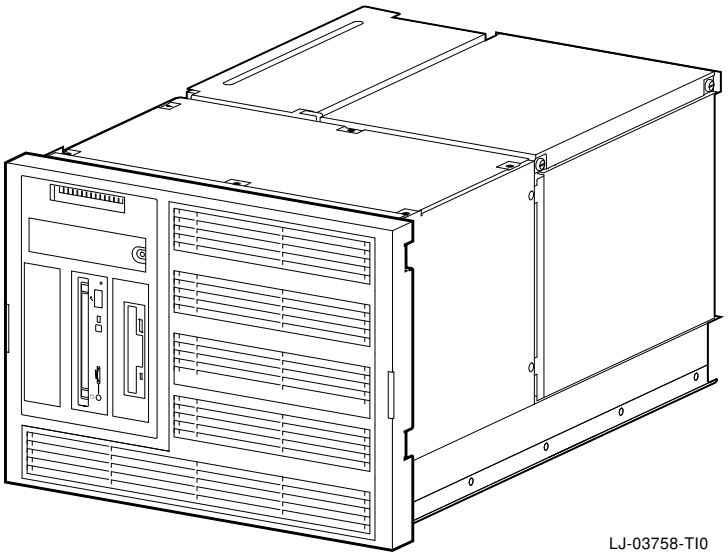

AlphaServer 2100A CAB System

The full-complement AlphaServer 2100A CAB system (Figure 1–2) is designed for office or satellite equipment room installations where floor space is at a premium, but large disk storage arrays and/or other expansion are required. The system is also intended for use in laboratory or factory environments where rackmount application-specific equipment must be configured with the system.

The cabinet system consists of a standard slide-mounted chassis and StorageWorks shelves installed in an H9A10 cabinet. The H9A10 cabinet meets the Electronic Industries Assocation (EIA) and the International Electrotechnical Commission (IEC) 297 standards.

Figure 1–2 AlphaServer 2100A CAB System

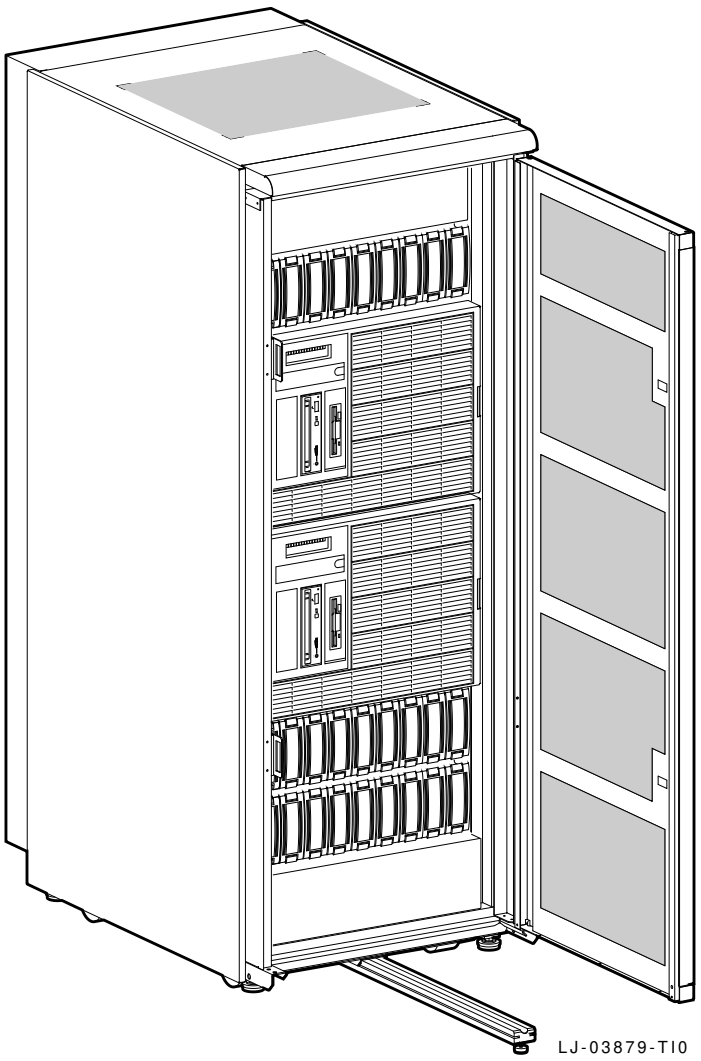

Characteristics

Table 1–1 highlights the specific characteristics of the AlphaServer 2100A RM series system.

Table 1–1 AlphaServer 2100A RM System Characteristics

	2100A 4/275	2100A 5/250	2100A 5/300
CPU Features			
Symmetric multiprocessing	1-4 processors	1-4 processors	1-4 processors
Processor	Alpha 21064A	Alpha 21164	Alpha 21164
CPU clock speed	275 MHz	250 MHz	291 MHz
Cache size on chip (I-cache/D-cache)	16 KB/16 KB	8 KB/8 KB–96 KB, unified L2	8 KB/8 KB–96 KB, unified L2
On-board cache	4 MB	4 MB	4 MB
In-cabinet CPU upgrade	Yes	Yes	Yes
Memory (maximum)	2 GB 1 GB for 4-CPU config.	2 GB 1 GB for 4-CPU config.	2 GB 1 GB for 4-CPU config.
Internal Storage			
Up to 2 internal drives (up to 6 GB); 1 floppy disk; 1 CD-ROM drive; 1 extra removable media slot			
I/O Features			
Maximum I/O Throughput: 132 MB/sec (PCI); 33 MB/sec (EISA)			
I/O Support: 8 PCI slots, 3 EISA slots			
High Availability Features			
Auto reboot, memory failover, thermal management, optional redundant power system, optional RAID, dual SCSI backplane, ECC cache, ECC memory, SMP CPU failover, error logging, optional UPS			

Components and Controls

Location

System components and controls are located at the front, top, left side, rear, and bottom of the system.

Components: Front of System

Figure 1–3 shows the components on the front of the system.

Figure 1–3 Front Components

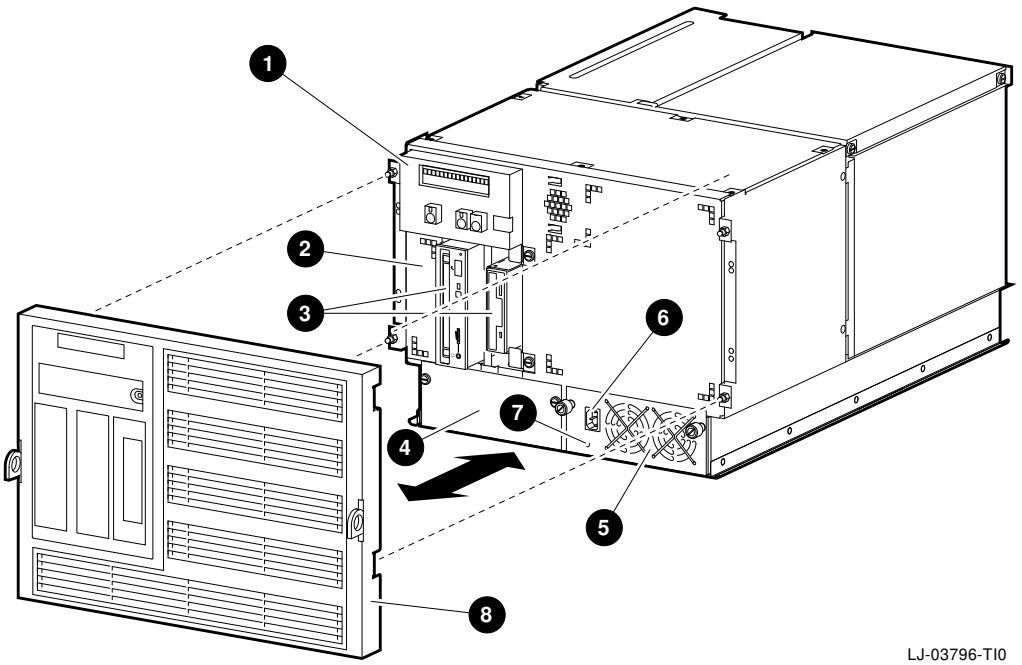

❶ Operator control panel (OCP)
❷ Optional slot for removable-media mass storage devices
❸ Removable-media mass storage devices
❹ Location for optional redundant power supply
❺ Power supply
❻ Power connector, AC (the system does not have an AC power switch)
❼ Power supply DC Okay indicator
❽ Front bezel

Operator Control Panel

The operator control panel (OCP), shown in Figure 1–4, is located on the front of the system. It contains a diagnostic display and buttons that allow the user to power, halt, and reset the system.

Figure 1–4 Operator Control Panel

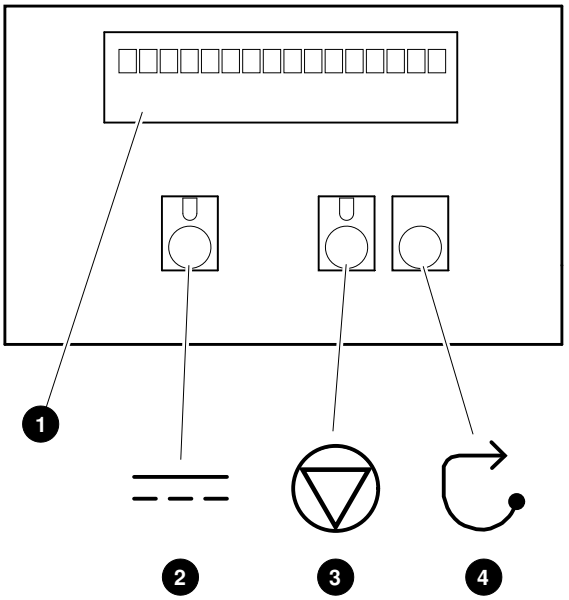

LJ-03778-TI0

❶ Power-Up/Diagnostic Display

The power-up/diagnostic display shows system status messages during the power-up and diagnostics sequence. Use the display to check the results of system self-tests.

For information about interpreting specific messages, refer to the Interpreting the Operator Control Panel Power-Up /Diagnostic Display section in Chapter 6.

❷ **DC On/Off**

The DC On/Off button controls the flow of DC power to the system. Use the DC On/Off button and the AC power cord to apply and disconnect power to the system. The DC On/Off light, located on the DC On/Off button, is lit whenever DC power is present.

❸ **Halt (Digital UNIX and OpenVMS systems only)**

The Halt light, located on the Halt button, comes on briefly during the system self-tests. Thereafter, the Halt light comes on and remains lit whenever DC power is present and the Halt button is in the ''in'' position.

Invoking Console Mode: Pressing the Halt button invokes console mode when Digital UNIX and OpenVMS are running. Pressing the Halt button has no effect when Windows NT is running.

Caution

Pressing the Halt button interrupts your operating system session. Before pressing the Halt button, shut down the operating system according to the operating system shutdown procedure described in your operating system documentation.

Returning to Operating System Mode: To return to operating system mode, press the Halt button to the ''out'' position and reboot the operating system.

Note

If the Halt button is pressed by mistake and few or no console commands have been entered, it may be possible to resume your operating system session by entering the `continue` command.

Before Power-Up: Pressing the Halt button before turning the system on prevents the system from booting the operating system. Instead, the system will remain in console mode. To boot the operating system and continue system operation, press the Halt button to the ‘‘out’’ position.

❹ **Reset**

Pressing the Reset button resets the system. The system aborts all current processes, initializes, and performs startup self-tests. Use the Reset button to reset the system if it hangs or to initialize the system if you have changed system settings.

Caution

Pressing the Reset button halts all system processes. *Do not* press the Reset button while the operating system is running unless your system is hung and all other ways of terminating the process have been exhausted.

Operator Control Panel Door

When the system chassis is installed in a cabinet, the OCP door allows access to the OCP controls without removing the front bezel. To open the OCP door, unlock the door ❶ and pull the upper-right edge ❷ of the door away from the system as shown in Figure 1–5.

Figure 1–5 Unlocking the OCP Door

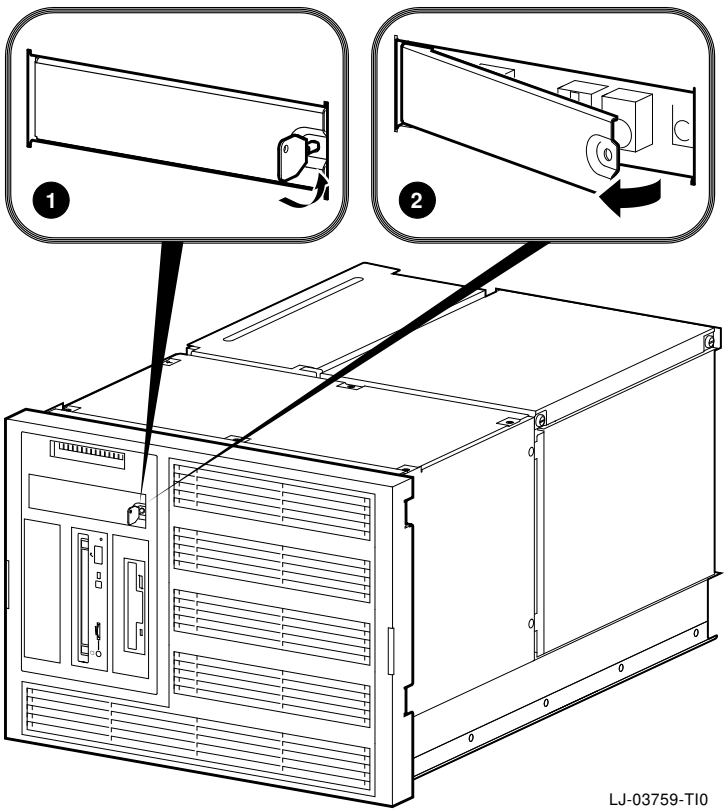

Components: Top of System

Figure 1–6 shows the location of the top-rear access cover to the module card-cage area and the top-front access cover to the area containing the fan assembly, removable-media mass storage device, and fixed-media mass storage device(s).

Warning: CPU and memory modules have parts that operate at high temperatures. Wait two minutes after power is removed before handling these modules.

Figure 1–6 Top Components

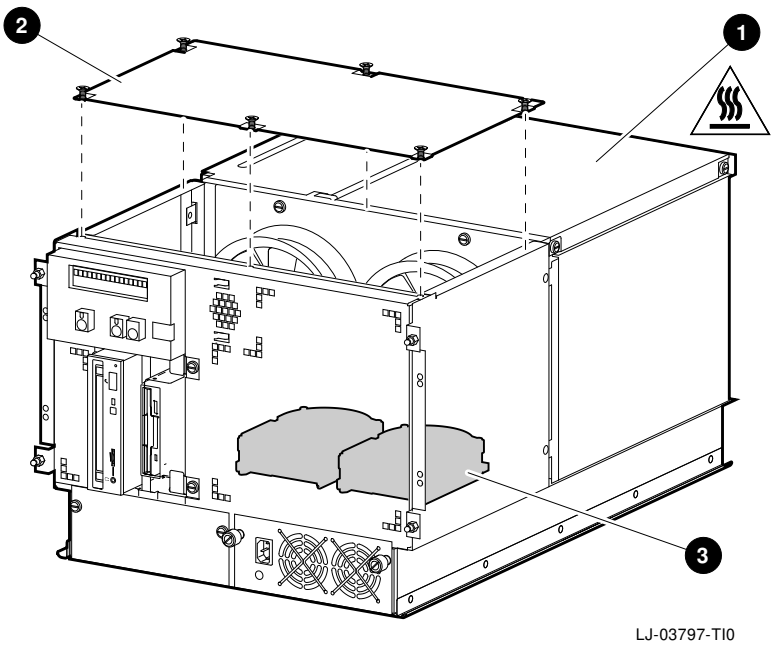

❶ Top-rear access cover
❷ Top-front access cover
❸ Fixed-media mass storage device (second device is optional)

Components: Left Side of System

Figure 1–7 shows how to access the PCI and EISA input/output (I/O) interface boards via the left-side access door.

Warning: For protection against fire, only use modules with current-limited outputs.

Figure 1–7 Left-Side Components

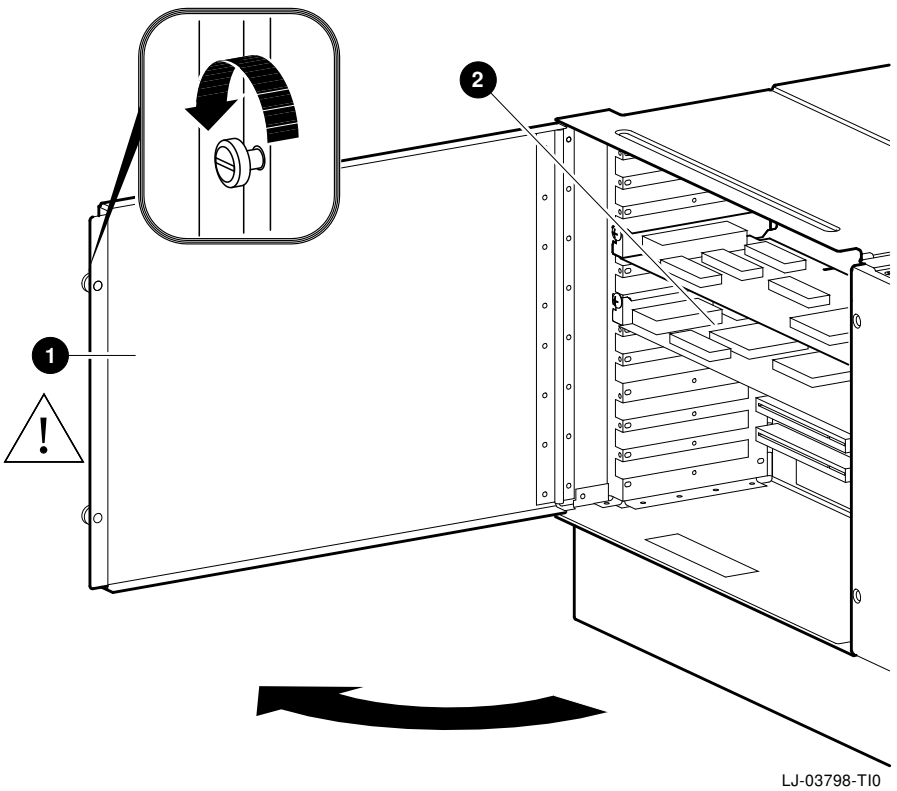

❶ Left-side access door ❷ I/O interface boards

Components: Rear of System

Figure 1–8 shows the major components at the rear of the system.

Figure 1–8 Rear Components

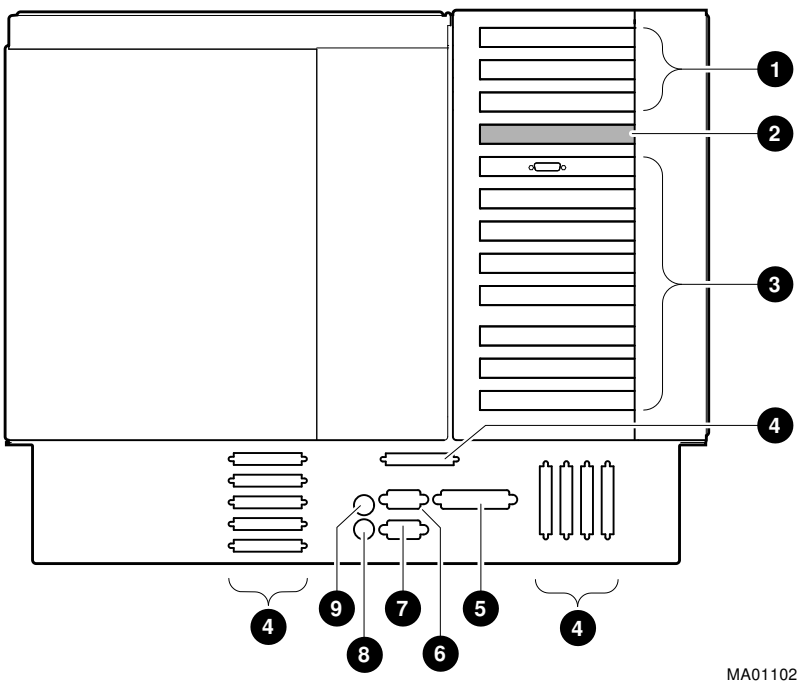

❶ EISA board bulkhead
❷ PCI/EISA bulkhead expansion port
❸ PCI board bulkhead
❹ SCSI/DSSI expansion ports
❺ Parallel port
❻ Serial port (COM1)
❼ Serial port (COM2)
❽ Mouse port
❾ Keyboard port

Components: Bottom of System

Figure 1–9 shows the bottom access door. This door provides service access to the power supply connections and the SCSI, parallel, serial (COM1 and COM2), mouse, and keyboard ports.

Warning: This area contains electrical energy. Disconnect the AC power cord(s) from the system before accessing this area.

Figure 1–9 Bottom Access Door

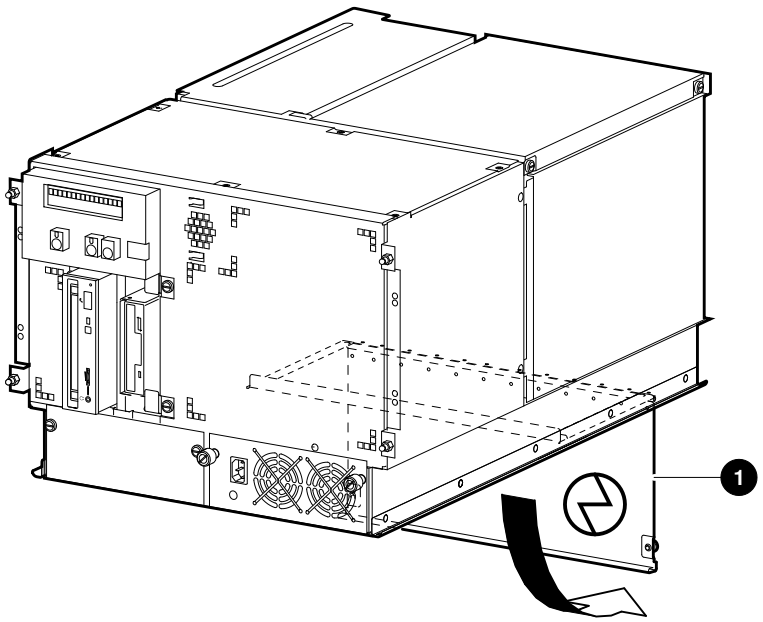

❶ Bottom access door

2

Hardware Specifications

In This Chapter

This chapter lists the hardware specifications for the AlphaServer 2100A RM and CAB series systems.

This chapter covers the following topics:

- System Architecture
- Jumpers and Switches on System Backplane
- System Dimensions
- Electrical Specifications
- Environmental Conditions
- Power Requirements

System Architecture

Figure 2–1 AlphaServer 2100A RM Architecture

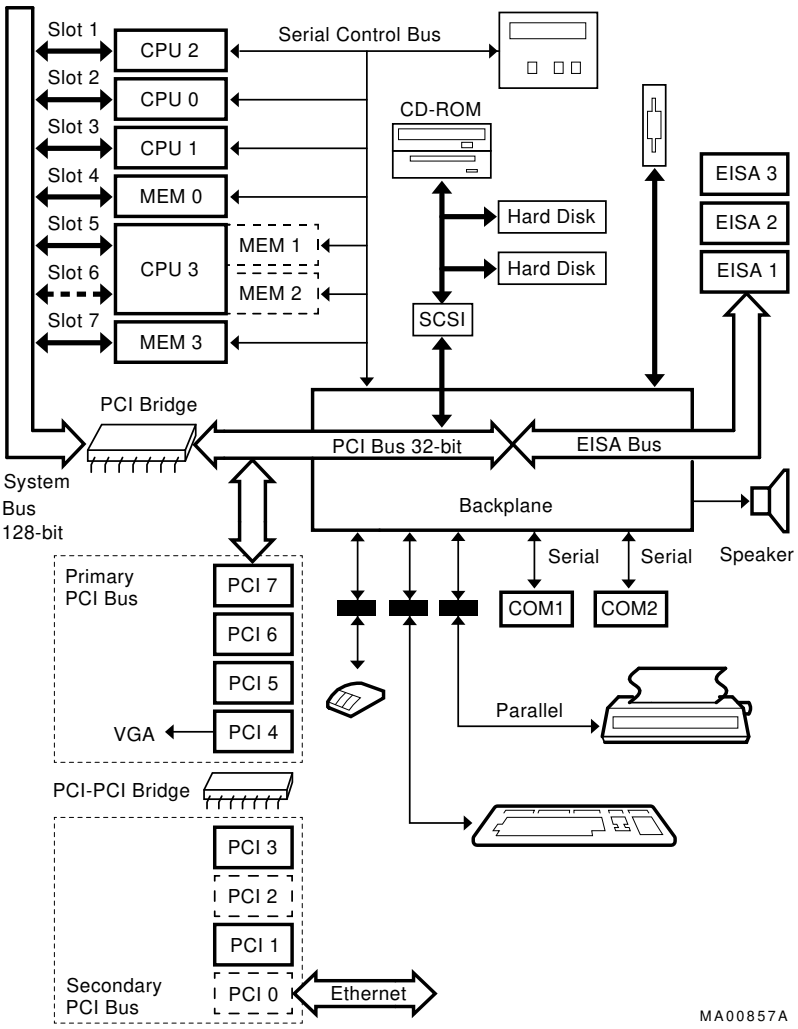

Jumpers and Switches on System Backplane

Figure 2–2 shows the location of jumpers and switches on the system backplane.

Figure 2–2 Locations of Jumpers and Switches

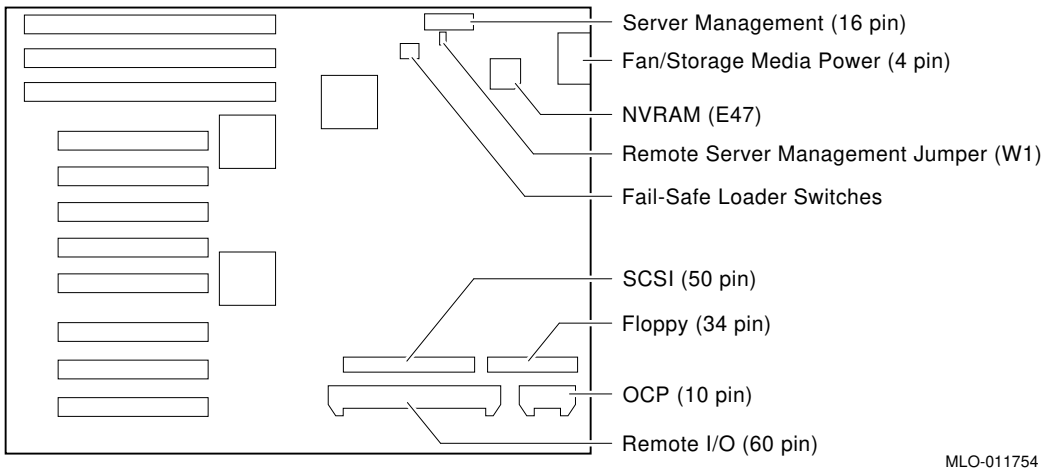

System Specifications

Rackmount System Dimensions

Table 2–1 provides information about the rackmount chassis dimensions. The dimensions differ depending on whether the system has the bezel for mounting into a cabinet with the English RETMA rail-hole pattern or the bezel for mounting into a cabinet with the metric RETMA rail-hole pattern.

Table 2–1 Rackmount System Chassis Dimensions

Weight	Height	Width	Depth
System for Installation Into Cabinets with English RETMA Hole Pattern			
100 lb	14.0 in.	19.0 in.	27.75 in.
System for Installation Into Cabinets with Metric RETMA Hole Pattern			
45.4 kg	35.0 cm	45.0 cm	70.0 cm

Note

The physical dimensions for the AlphaServer 2100A CAB system are provided in the *H9A10 (600 mm) Cabinet Installation/Owner's Guide* that comes with the CAB system.

Electrical Specifications

The following tables provide electrical specifications for the rackmount system and the cabinet system. The same specifications apply to systems with one or two power supplies.

- Table 2–2 — electrical specifications for the rackmount system.
- Table 2–3 — electrical specifications for the cabinet system (60 Hz).
- Table 2–4 — electrical specifications for the cabinet system (50 Hz).

Table 2–2 Rackmount System Electrical Specifications

Input voltage	100-120 VAC/220-240 VAC with automatic voltage sensing
Input current (maximum)	12.0 A at 100-120 VAC 5.2 A at 220-240 VAC
Phasing	Single-phase
Frequency	50/60 Hz
Power (maximum)	1200 W input maximum, system only, power factor .98 minimum
U.S.A. power cord plug	NEMA 5-15P (Mates with receptacle NEMA 5-15R) for 120 V applications or NEMA 6-15P (Mates with receptacle NEMA 6-15R) for 240 V applications.

Table 2–3 Cabinet System Electrical Specifications (60 Hz)

Requirement	Specification
Input voltage	100-120 VAC nominal
Operational voltage range	90-132 VAC
Phasing	Single-phase
Frequency range	57-63 Hz, 60 Hz nominal
Input current	8 A typical, 16 A maximum, per power cord
Ground current	2.3 mA typical
Power consumption	1600 W typical, 3450 W maximum
U.S.A. power cord plug (3 pole, 3 wire)	NEMA L5-30P (Mates with receptacle NEMA L5-30R)

Two power controllers or power distribution units rated at 24 A for 100–120 VAC are supplied with the system.

Warning

High Leakage Current — An insulated earthing conductor that is identical in size, insulation material, and thickness to the earthed and unearthed branch-circuit supply conductors (except that it is green with or without one or more yellow stripes) is to be installed as part of the branch circuit that supplies the system. The earthing conductor described is to be connected to earth at the service equipment or, if supplied by a separately derived system, at the supply transformer or motor-generator set.

The attachment-plug receptacles in the vicinity of the system are all to be of an earthing type, and the earthing conductors serving these receptacles are to be connected to earth at the service equipment.

Table 2–4 Cabinet System Electrical Specifications (50 Hz)

Requirement	Specification
Input voltage	220-240 VAC nominal
Operational voltage range	180-256 VAC
Phasing	Single-phase
Frequency range	47-53 Hz, 50 Hz nominal
Input current	4 A typical, 8 A maximum, per power cord
Ground current	4.4 mA typical
Power consumption	1600 W typical, 3450 W maximum
UK power cord plug (3 pole, 3 wire)	NEMA L6-20P (Mates with receptacle NEMA L6-20R)

Two power controllers or power distribution units rated at 16 A for 220–240 VAC are supplied with the system.

Environmental Conditions

The following tables provide information about the environmental conditions for the AlphaServer 2100A RM and CAB systems.

- Table 2–5 — environmental conditions for rackmount system.
- Table 2–6 — environmental conditions for cabinet system.

Table 2–5 Rackmount System Environmental Conditions

Conditions	Specifications
Temperature range:	
Operating	10°C to 40°C (50°F to 104°F)
Nonoperating	-40°C to 66°C (40°F to 151°F)
Temperature change rate	11°C/hr (20°F/hr) maximum
Relative humidity:	
Operating	20% to 80% (noncondensing)
Nonoperating	10% to 90% (noncondensing)
Altitude:	
Operating	2000 m (6,562 ft)
Nonoperating	3600 m (12,000 ft)
Maximum wet bulb temperature	28°C (82°F)
Minimum dew point	2°C (36°F)
Maximum heat dissipation	1200 W AC, 4,080 BTU/hr
Airflow	200 CFM

Table 2–6 Cabinet System Environmental Conditions

Conditions	Specifications
Temperature range:	
Operating	10°C to 35°C (50°F to 95°F)
Nonoperating	-40°C to 66°C (-40°F to 151°F)
Storage (60 days)	-40°C to 66°C (-40°F to 151°F)
Rate of change	11°C/hr (20°F/hr)
Relative humidity:	
Operating	10-80% noncondensing
Nonoperating	10-80% noncondensing
Storage	10-80% noncondensing
Storage (60 days)	10-80% noncondensing
Rate of change	20%/hr
Maximum heat dissipation	3450 W AC, 11,730 BTU/hr
Air flow:	
Operating	400 CFM
Intake location	Cabinet front
Exhaust location	Cabinet rear top
Altitude:	
Operating	2000 m (6,562 ft)
Nonoperating	3600 m (12,000 ft)

Power Requirements

The AlphaServer 2100A RM system has either one or two power supplies, depending on your order. Figure 2–3 shows the power requirements for each system power supply.

Voltage selection is not required. This equipment is intended for use at all rated AC-input voltages.

Warning: High voltage shock hazard present inside the power supply.

Figure 2–3 Power Requirements

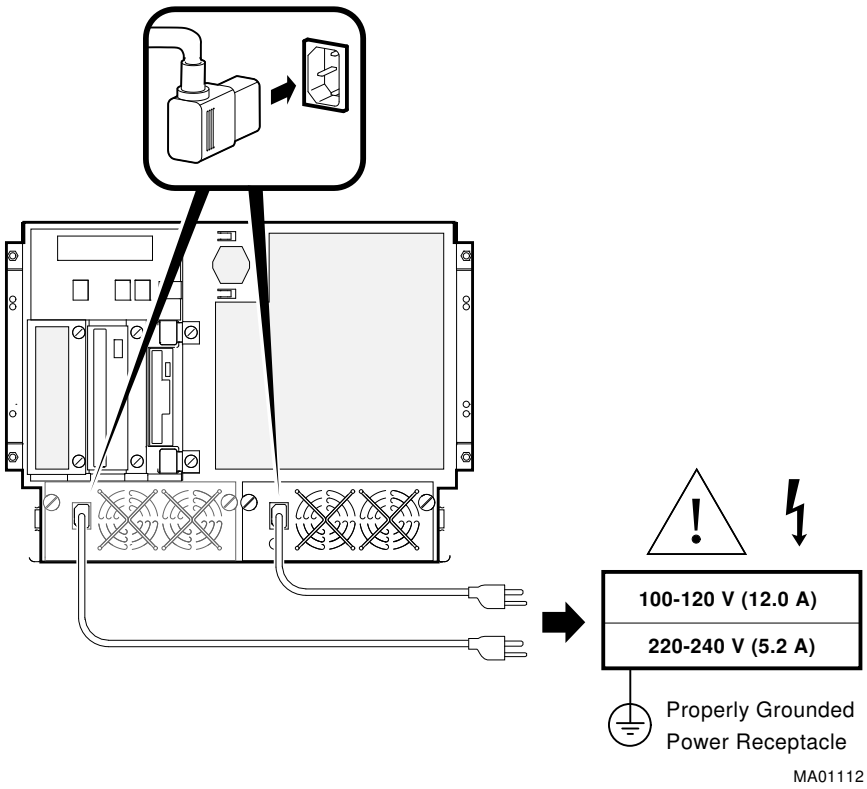

Power Cords

Power cords for the AlphaServer 2100A RM series system are country-specific. The system is shipped with a U.S. power cord or a 240 V power cord (PN: 17-00083-52).

For a list of the available power cords and their appropriate part numbers, refer to Table 2–7 and note the following:

- If you are a customer, use the Power Cord BN Number to identify the power cord that you need.
- If you are a Digital service representative, use the Digital Number to identify the power cord that you need.

Note

One power cord is needed for each power supply in your system.

Table 2–7 Power Cord Order Numbers

Country	Power Cord BN Number	Digital Number
U.S., Japan, Canada [1]	—	17-00083-51
Australia, New Zealand	BN19J-2E	17-00198-13
Central European (Aus, Bel, Fra, Ger, Fin, Hol, Nor, Swe, Por, Spa)	BN19D-2E	17-00199-22
U.K., Ireland	BN19B-2E	17-00209-16
Switzerland	BN04B-2E	17-00210-12
Denmark	BN19L-2E	17-00310-06
Italy	BN19N-2E	17-00364-17
India, South Africa	BN19T-2E	17-00456-15
Israel	BN19Y-2E	17-00457-15

[1]This power cord is included with the system.

Power Controllers for CAB System

Two power controllers or power distribution units and their power cords are shipped with each AlphaServer 2100A CAB system. The power cords have either 5-30P plugs for 120-VAC operation or 6-20P plugs for 240-VAC operation in the U.S.A., Canada, and Japan. If the plugs are not compatible to your power-source receptacle, contact Digital Multivendor Customer Services for assistance.

3
Installation

In This Chapter

This chapter explains how to install a rackmount system chassis into a cabinet. It also describes the following topics:

- Interlock system, which ensures cabinet stability
- Cable management system for routing data cables and power cords
- Installation of keyboard/mouse/VGA extender cables
- System expansion

Note

The AlphaServer 2100A CAB system comes in the H9A10 (600 mm) cabinet. Instructions for installing the cabinet are provided in the *H9A10 (600 mm) Cabinet Installation/Owner's guide*.

Before Installing the System

Warning

Only qualified service persons should install the system. Qualified service persons need not be Digital service representatives, but should have the technical training and experience necessary:

- To be aware of physical hazards to which they are exposed in performing a task
- To take measures to minimize the danger to themselves or other persons.

A qualified service person need not be a Digital service representative.

Tools Required

The tools required to install the rackmount system are:

- Scissors
- Flat-blade screwdriver
- Phillips screwdriver
- Adjustable wrench

Verifying the Site Preparation

Overview

The installation instructions that follow assume that:

- All cables that you plan to connect to your system are in place and clearly labeled. These cables are:

  Terminal data cables
  Telephone cables
  Network cables

- The specifications and conditions listed in Chapter 2 have been met.
- The system is located in an area that provides sufficient clearance for ventilation and servicing. Figure 3–1 shows the recommended clearance for the system.

Caution

Do not impede airflow by obstructing the front and rear of the unit. Exceeding internal thermal limits can affect system reliability/availability.

Warning

The AlphaServer 2100A RM series system weighs 45.4 kg (100 lb). To prevent personal injury and equipment damage, ensure that the system is contained in an enclosure that can be stabilized when the system chassis is pulled out on its slides.

Figure 3–1 System Clearance and Service Area

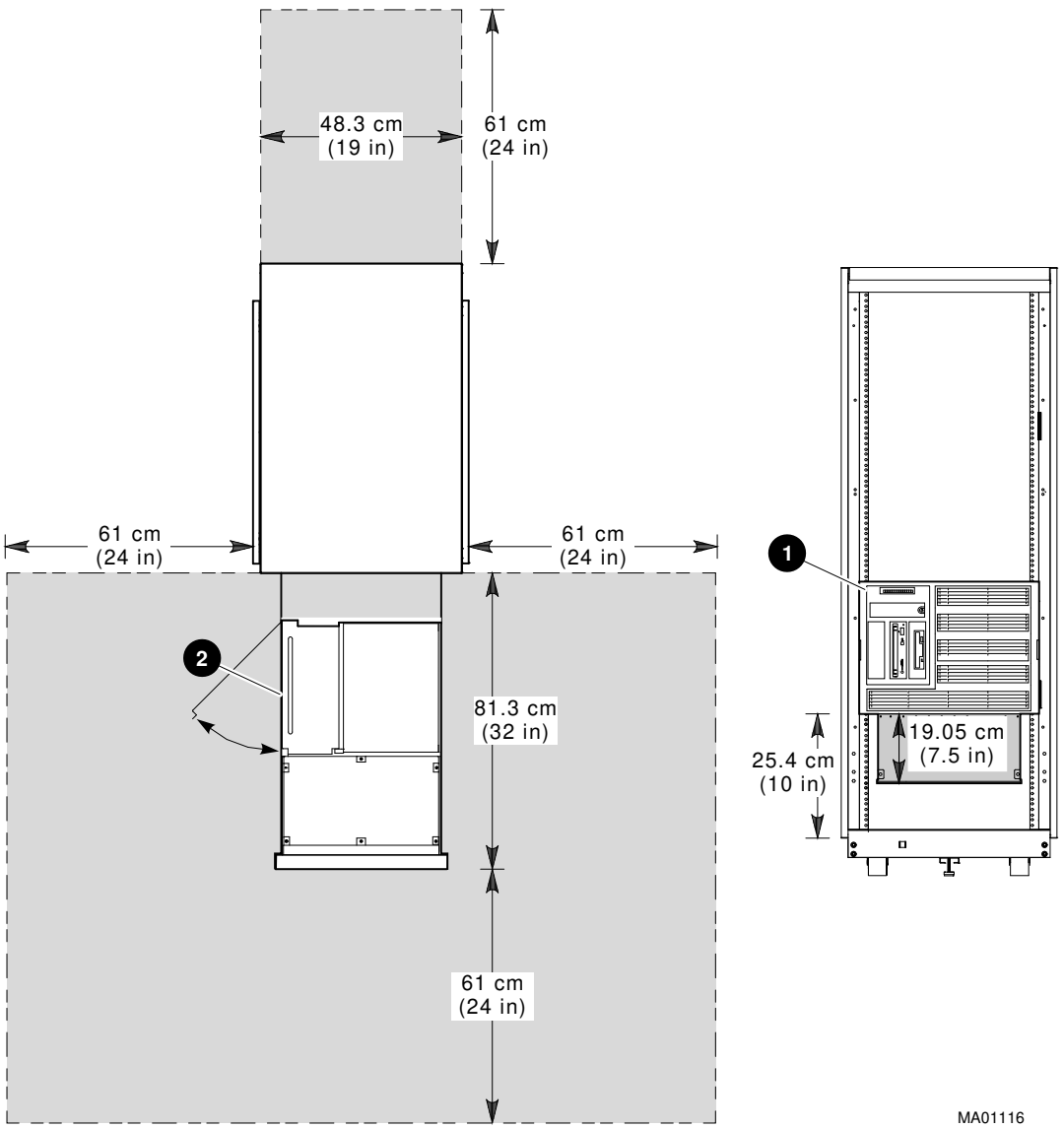

❶ Front bezel

❷ Top of unit

Unpacking the Shipment

Checking the Shipment

Note

Save all packing materials in case you need to return the system for service or to reship the system.

Check the packing list to ensure that all items listed have been received. If any item is missing or damaged, contact your delivery agent immediately and notify your Digital sales representative.

Your shipment may include several cartons. One carton contains the system, hardware documentation, software documentation, system software, diagnostic software, and software licenses.

Depending on your order, your shipment may also include some of the following components:

- Terminals
- Printers
- Modems
- Options

Warning

The AlphaServer 2100A RM series system weighs 45.4 kg (100 lb). Use sufficient personnel to remove the system from the shipping carton.

Accessories

Table 3–1 lists the mounting hardware included with the system chassis for installation in cabinets conforming to either English RETMA or metric RETMA standards.

If you purchased a cabinet system, most of the 74- and 90-class items are already embedded in the system.

Table 3–1 Rackmount System Accessory Kit (PN: 70-32506-01)

Description	Part Number	Quantity
Rubber grommet	12-31734-01	4[1]
Serial line adapter	H8571-J	1
Power cord, term 3-14 SJT 125 V	17-00083-51	1[2]
Chassis slide assembly	12-46387-01	1 pair
Drive plate	74-48242-01	1[3]
Left slide bracket	74-48424-01	2
Right slide bracket	74-48424-02	2
Bar nut	74-48746-01	4
Cable management bracket (for cabinet)	74-48881-01	1
Cable management bracket (for chassis)	74-48882-01	1
Interlock actuator bracket	74-48999-01	1
Stabilizer bracket	74-48996-01	1
Actuator latch	74-48997-02	1
Stabilizer bracket nut plate	74-48998-01	1
Screw, 10-32 truss-head	90-00063-37	2
Set screw, 6-32	90-06291-10	2
Screw, 10-32 truss-head	90-00063-39	24
Cable tie, 1.25-inch diameter	90-07031-01	10
U-nut, 10-32 x 0.615L	90-07786-00	8

[1]If a second hard disk was ordered, this item is already embedded in the system.

[2]Two power cords are included in a redundantly powered system.

[3]If a second removable media SCSI device was ordered, this item is already embedded in the system, and the kit contains a blank panel.

(continued on next page)

Table 3–1 (Cont.) Rackmount System Accessory Kit (PN: 70-32506-01)

Description	Part Number	Quantity
Key	90-11194-01	1
Standoff, hex, male-female	90-00001-64	2
Split washer	90-06688-00	2
Pan-head machine screw, M4 x 10 mm	90-10556-01	14
Flat-head machine screw, M3 x 6 mm	90-40122-03	4
Keyboard/mouse/VGA extender cable kit	2T-450KM-AA	1
AlphaServer 2100A RM Customer Documentation Kit	QZ-00TAC-GC	1
AlphaServer 2100A RM Series Installation/Owner's Guide	EK-2100A-RM	1

Installing the System Slides

Overview

The rackmount system is shipped with one pair of slide assemblies (PN: 12-46387-01), which include:

- Four universal brackets for both English RETMA or metric RETMA cabinet installation
- Pair of slide assemblies
- Attaching hardware

Installing the system on the slides involves the following major steps:

1. Preparing the slides
2. Attaching the slide races
3. Attaching the slides to the cabinet rails
4. Mounting the system chassis on the slides

Tools Required

A flat-blade screwdriver and a small adjustable wrench are needed to install the rackmount system chassis.

Preparing the Slides

Refer to Figure 3–2 and prepare the slides as follows:

Caution

To avoid damaging the slides, it is important that the installation be performed as instructed in the following procedure.

Note

Unless noted otherwise, the following instructions apply to both English RETMA and metric RETMA cabinet installations.

1. Find the slide assembly ❶ labeled RH (for right-hand side) that is shipped with the system.
2. Pull out the inside race ❷ until it locks. *Do not* remove the race from the slide assembly at this time.
3. Orient the slide so that the arrow ❸ next to the locking lever ❹ is pointing upward.
4. For English RETMA cabinets, slide the E/LF-RR bracket ❺ onto the rear end of the slide assembly ❶ with the end stamped E facing away from the slide.

   For metric RETMA cabinets, use the same procedure as above, except slide the M/LF-RR bracket onto the rear end of the slide assembly with the end stamped M facing away from the slide.

Figure 3–2 Attaching the Brackets to the Right Slide Assembly (English RETMA)

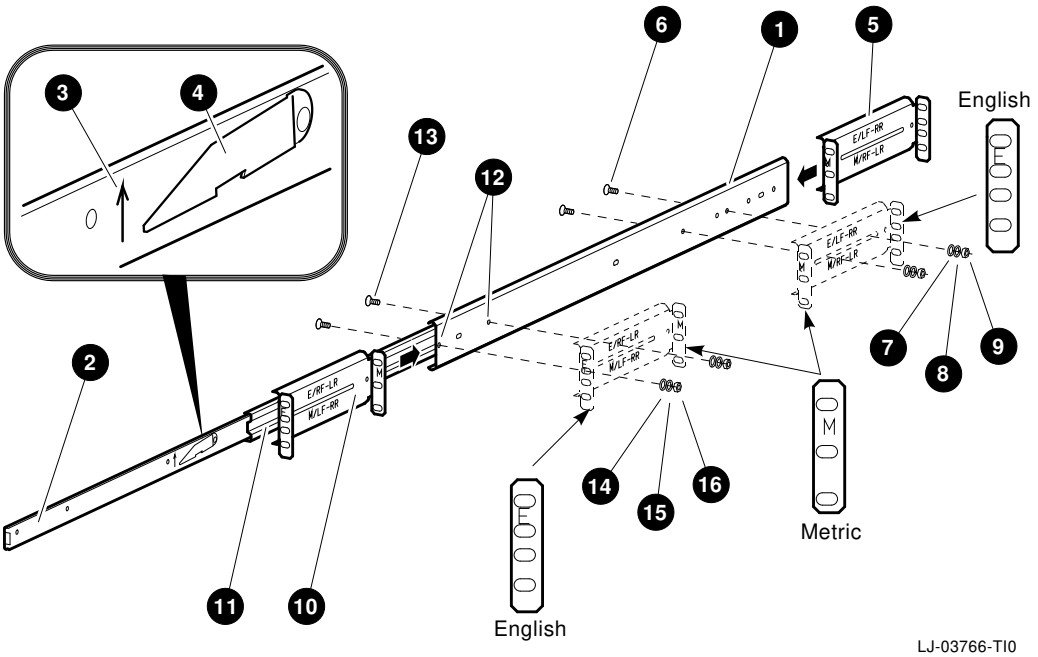

5. Attach the rear bracket ❺ to the slide assembly ❶ using the mounting holes shown in Figure 3–2 and two 8-32 screws ❻, flat washers ❼, lock washers ❽, and nuts ❾, but do not tighten. The bracket must be loose enough to adjust later.
6. Press up on the locking lever ❹ (direction of the arrow ❸), and pull the race ❷ out of the slide assembly ❶.
7. For English RETMA cabinets, slide the E/RF-LR bracket ❿ onto the front end of the slide assembly ❶ with the end stamped E facing away from the slide.

   For metric RETMA cabinets, use the same procedure as above, except slide the M/RF-LR bracket onto the front end of the slide assembly with the end stamped M facing away from the slide.
8. To fasten the front bracket to the slide assembly, proceed as follows:
   a. Pull out the inside slide ⓫ about halfway, enough to align two half-inch access holes on the inside slide with the mounting holes ⓬ on the slide assembly ❶ and the front bracket ❿. The first hole on the slide assembly aligns with the first hole on the bracket as shown in Figure 3–2.
   b. Attach the front bracket ❿ to the slide assembly ❶ using two 8-32 screws ⓭, flat washers ⓮, lock washers ⓯, and nuts ⓰. Tighten the screws.
   c. Slide the race ❷ back into the slide assembly, making sure that the arrow ❸ is pointing upward and the locking lever is pointing away from the slide assembly.
   d. Set this assembly aside.

9. Find the slide assembly labeled LH (for left-hand side) that is shipped with the system.

Caution

To avoid damaging the slides, it is important that the installation be performed as instructed in the procedure previously outlined in steps 2 through 8.

10. Attach the rear and front brackets (following steps 2 through 8) using the brackets as follows:

- For English RETMA cabinet installation, use bracket E/RF-LR for the rear end of the slide assembly and bracket E/LF-RR for the front end of the slide assembly.
- For metric RETMA cabinet installation, use bracket M/RF-LR for the rear end of the slide assembly and bracket M/LF-RR for the front end of the slide assembly.

Reminder

Figure 3–2 shows how to attach the front and rear brackets to a right slide assembly for an English RETMA cabinet. Use as reference only when assembling the left slide assembly.

Attaching the Slide Races

To attach the slide races, refer to Figure 3–3 and proceed as follows:

1. Remove the race from the slide assembly labeled RH.

Caution

When performing the next step, ensure that the arrow ❶ (shown in Figure 3–3) points upward and the locking lever ❷ points toward the front of the system. Otherwise, the slide will be damaged when the system is installed on the slides.

2. Attach the right slide race ❸ to the right side of the system chassis ❹ (as viewed from the front) using four pan-head screws ❺.
3. Remove the race from the slide assembly labeled LH.
4. Take note of the caution in step 1 and repeat step 2 to attach the left slide race to the left side of the system chassis.

Figure 3–3 Attaching the Slide Races

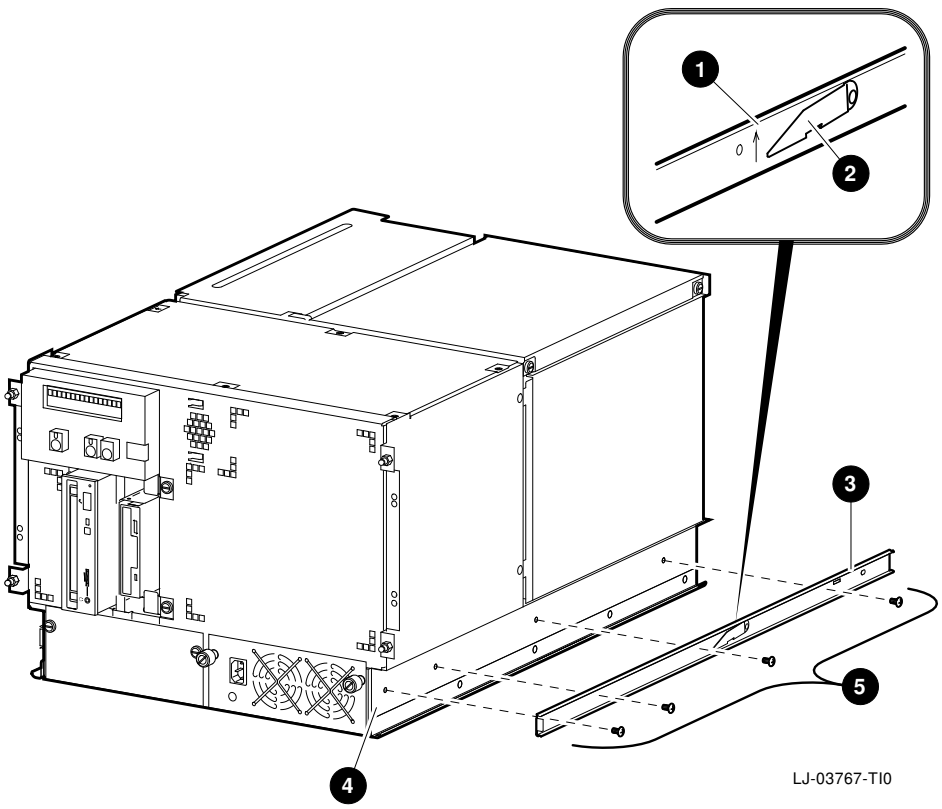

Attaching the Power Cords

To install the power cord, refer to Figure 3–4 and proceed as follows:

1. Attach the power cord ❶ to the right (facing the system) chassis tray ❷ using seven tie wraps ❸. Ensure that there is enough slack left in the power cord so that it can be plugged into the system AC connector ❹ later.

   Note

   At this time, leave the power cord disconnected from the system AC connector ❹. This connection serves as an AC power switch.

2. Coil the male plug end of the power cord ❺ and place it on top of the system to keep it out of the way.
3. If the system has a redundant power supply, repeat steps 1 and 2 to attach the power cord to the left (facing the system) chassis tray.

Figure 3–4 Attaching the Power Cord

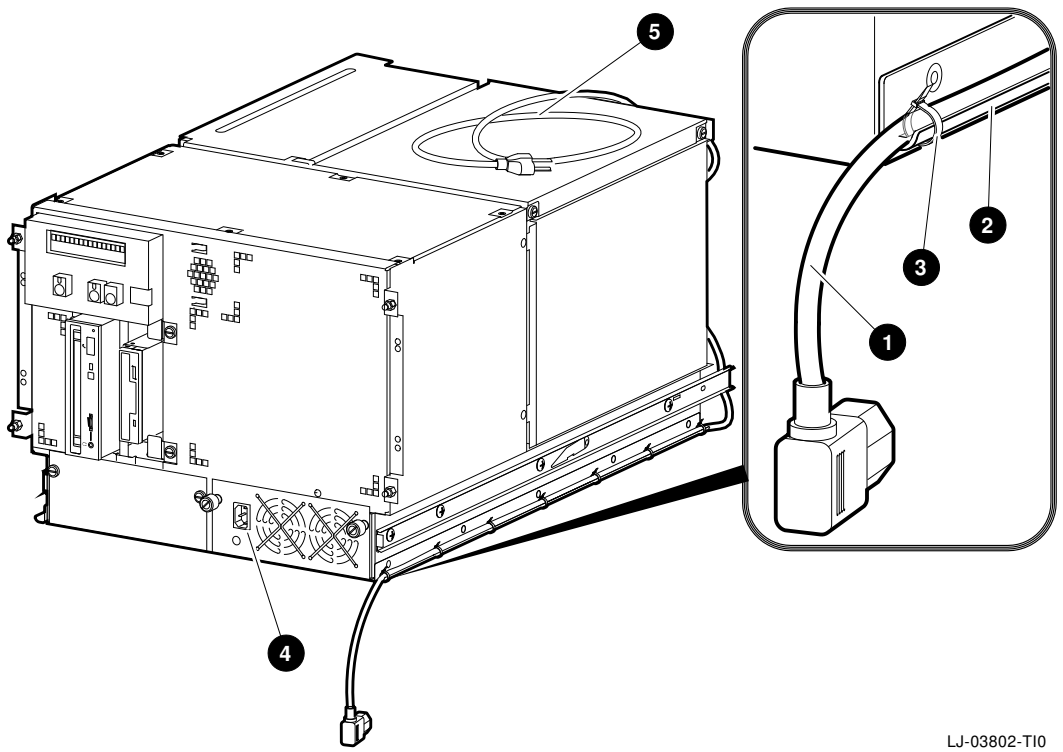

Cabinet Stability

Warning

To ensure cabinet stability, Digital does not recommend installing a system chassis in the top area of the cabinet.

Cabinet Rail-Hole Pattern (English RETMA)

In a cabinet conforming to the English RETMA standard, the holes in the cabinet rails follow a pattern of 1.27 cm (0.50 in.), 1.59 cm (0.625 in.), and 1.59 cm (0.625 in.). This pattern is repeated for the length of the cabinet rails.

Determining the Installation Area (English RETMA)

To determine the installation area, perform the following steps at the front and rear cabinet rails (refer to Figure 3–5).

Step	Action
1	Select a section of the cabinet rail where there is a 1.27 cm (0.50 in.) space between two holes.
2	Make a mark between the holes. This is the starting point of the installation area.
3	Count up or down three holes. This is one *set* and equals 4.45 cm (1.75 in.).
4	Count up or down eight sets and make a mark. The area between the marks is the *installation area*.

The total installation area is 35.6 cm (14 in.). The equation for calculating the total installation area is:

4.45 cm (1.75 in.) $\times$ 8 sets = 35.6 cm (14 in.)

Note

The hole count described in this section determines the system installation location in any 35.6-cm (14-in.) area of the cabinet.

It is recommended that the system chassis be installed a minimum of 43 cm (17 in.) from the floor to provide sufficient clearance for service through the bottom access door.

Figure 3–5 Installation Area and Mounting Holes (English RETMA)

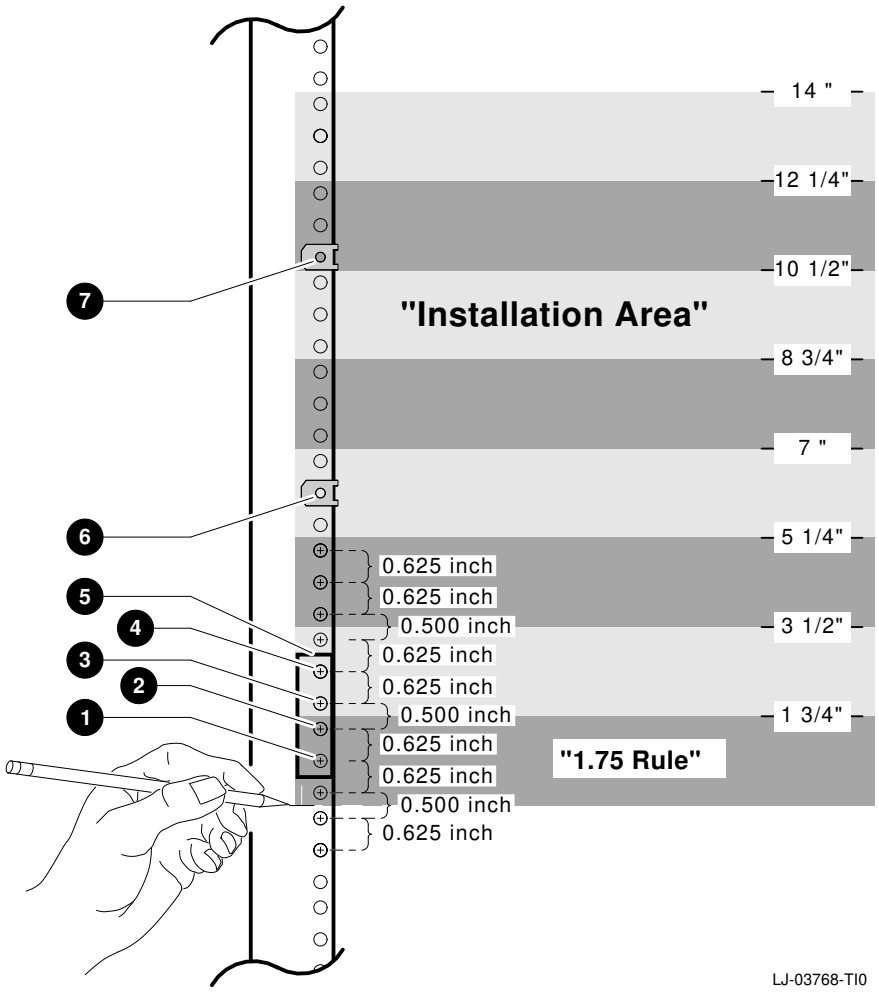

❶ Hole 2 for attaching slide bracket
❷ Hole 3 for attaching slide bracket
❸ Hole 4 for attaching slide bracket
❹ Hole 5 for attaching slide bracket
❺ Bar nut—placed behind rail (front and back rails)
❻ Hole 11 for clip nut used to secure system to front rails
❼ Hole 19 for clip nut used to secure system to front rails

Cabinet Rail-Hole Pattern (Metric RETMA)

In a cabinet conforming to the metric RETMA standard, the holes in the cabinet rails are 2.5 cm (0.98 in.) on center throughout the length of the cabinet rails.

Determining the Installation Area (Metric RETMA)

To determine the installation area, perform the following steps at the front and rear cabinet rails (refer to Figure 3–6).

Step	Action
1	Select a section of the cabinet rail where there are 14 consecutive holes unoccupied.
2	Make a mark between the first hole (bottom) and the one below it. This is the starting point of the installation area.
3	Count up 14 holes and make a mark halfway between the 14th and 15th hole. The area between the marks is the *installation area*.

The total installation area is 35 cm (13.78 in.). The equation for calculating the total installation area is:

2.5 cm (0.98 in.) $\times$ 14 holes = 35 cm (13.78 in.)

Note

The hole count described in this section determines the system installation location in any 35-cm (13.78-in.) area of the cabinet.

It is recommended that the system chassis be installed a minimum of 43 cm (17 in.) from the floor to provide sufficient clearance for service through the bottom access door.

Figure 3–6 Installation Area and Mounting Holes (Metric RETMA)

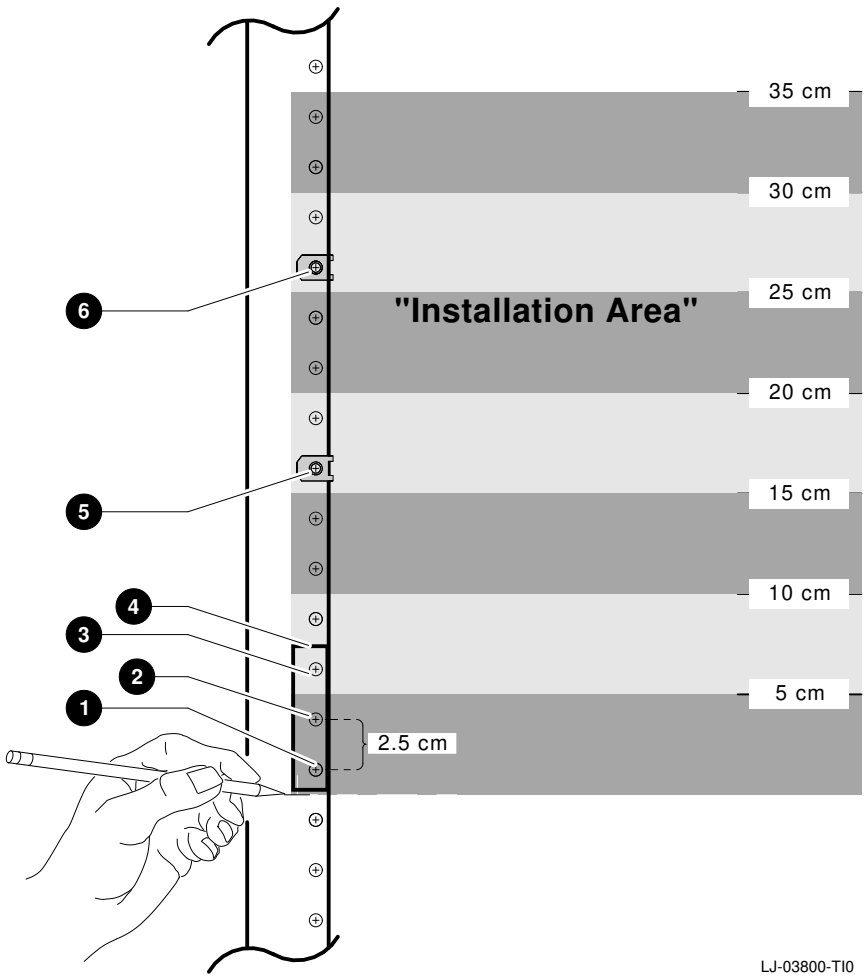

❶ Hole 1 for attaching slide bracket
❷ Hole 2 for attaching slide bracket
❸ Hole 3 for attaching slide bracket
❹ Bar nut—placed behind rail (front and back rails)
❺ Hole 7 for clip nut used to secure system to front rails
❻ Hole 11 for clip nut used to secure system to front rails

Installing the U-Nuts

Four U-nuts must be installed on the cabinet rails to receive the screws that secure the system to the rails. To install the U-nuts, proceed as follows:

1. In a cabinet with the English RETMA hole pattern, locate the 11th and 19th holes on the front rails in the installation area (refer to Figure 3–5). In a cabinet with the metric RETMA hole pattern, locate the 7th and 11th holes on the front rails in the installation area (refer to Figure 3–6).
2. Install a U-nut over each mounting hole identified in step 1 by sliding the U-nut over the edge of the cabinet rail and aligning it with the hole. Ensure that the threaded half of the U-nuts are toward the inside of the cabinet.

Attaching the Slides to the Cabinet Rails

To attach the slides to the cabinet rails, refer to Figure 3–7 and proceed as follows:

1. Locate the slide assembly labeled RH. In English RETMA cabinets attach the RH slide assembly ❶ to the right front cabinet rail ❷ (facing the front of the cabinet) using four 10-32 screws ❸ (for metric RETMA, use three screws) and bar nut ❹. Do not tighten the screws at this time.
2. Attach the RH slide assembly ❶ to the right rear cabinet rail ❺ using four 10-32 screws ❻ (for metric RETMA, use three screws) and bar nut ❼. Do not tighten the screws at this time.
3. Tighten the 8-32 screws attaching the rear bracket to the RH slide assembly (shown in Figure 3–2).
4. Repeat steps 1 through 3 to attach the LH slide assembly to the left cabinet rails.
5. Tighten the screws on the front and rear cabinet rails only enough to allow play for the slides to self-align when the system chassis is installed in the next procedure.

Figure 3–7 Attaching the Slides to the Cabinet Rails

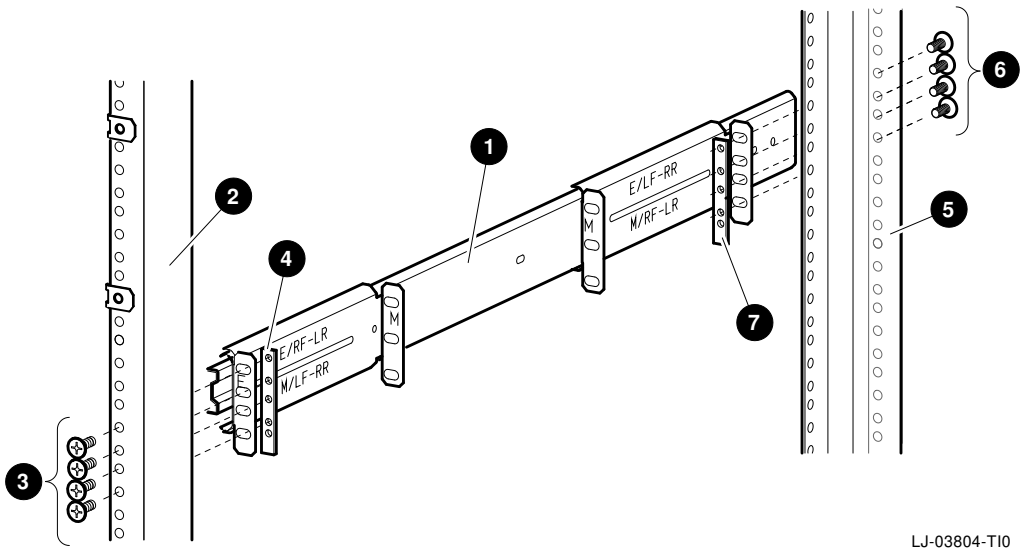

Mounting the System on the Slides

To mount the system chassis on the slides, refer to Figure 3–8 and proceed as follows:

Warning

The fully-loaded AlphaServer 2100A RM series system weighs 45.4 kg (100 lb). Use sufficient personnel and the proper equipment when lifting or moving the rackmount system.

Stabilize the cabinet before installing the system chassis into the cabinet. Figure 3–8 shows an example of a cabinet with the stabilizer foot ❶ extended.

1. Pull both equipment slides ❷ out fully to their locked positions.

Note

Coil the male plug end of the power cord ❺ and place it on top of the system to keep it out of the way when performing the next step.

2. Lift the chassis ❸ and position it so that the slide races fit into the front end of the slides.
3. Push the system into the slides until it stops. Push up on the two locking levers ❹, and then push the system into the cabinet.

Figure 3–8 Mounting the System on the Slides

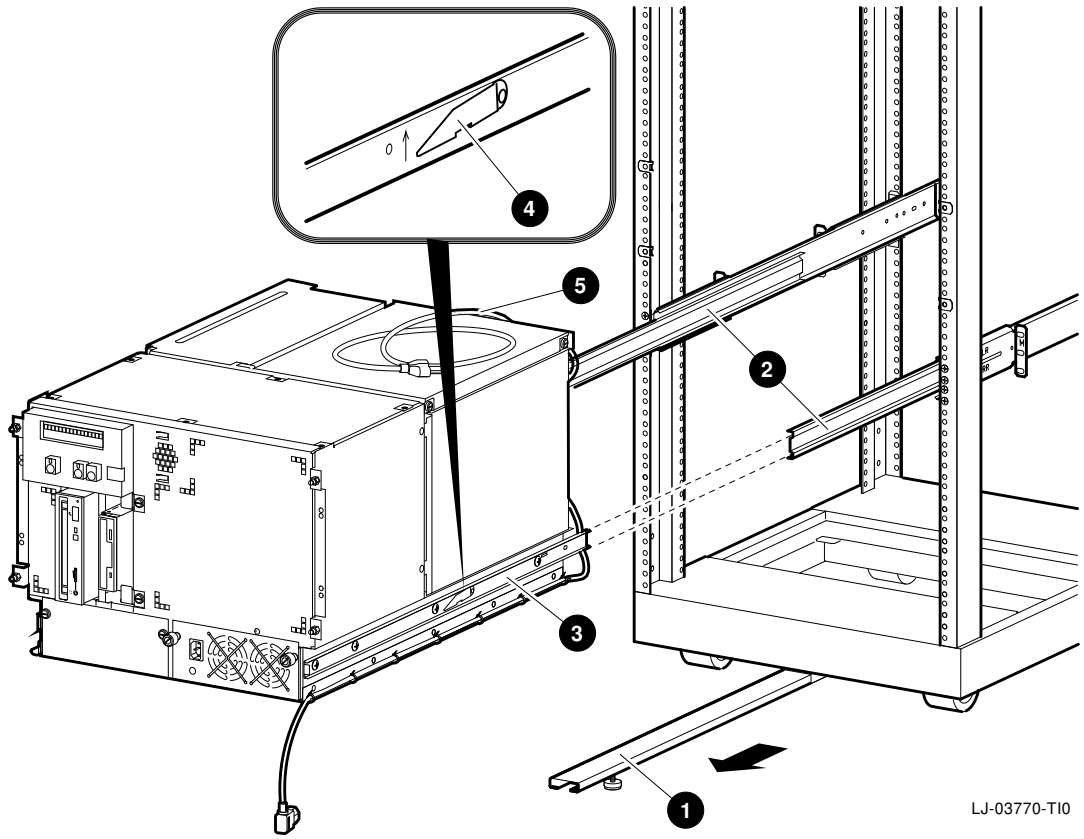

Aligning the System Slides to the Cabinet Rails

To align the system slides to the cabinet rails and ensure smooth operation in and out of the cabinet, refer to Figure 3–9 and proceed as follows:

1. Pull up on the front of the system chassis and secure the system to the front cabinet rails using four 10-32 screws ❶. The screws go through the system brackets and into the four U-nuts previously installed on the cabinet rails (refer to Figure 3–5 and Figure 3–6).
2. Securely tighten all the screws fastening the slides to the cabinet rails. These were installed earlier in the Attaching the Slides to the Cabinet Rails section (refer to Figure 3–7).

Figure 3–9 Aligning the System Slides to the Cabinet Rails

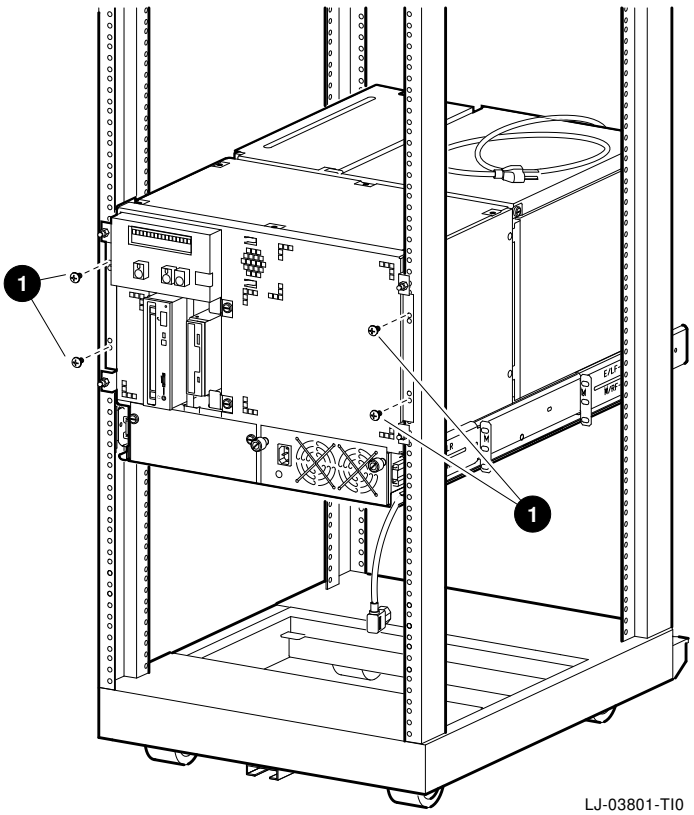

Using the Interlock System

The interlock system helps prevent cabinet instability by allowing only one system at any one time to be pulled out of the cabinet.

The interlock system consists of a vertical bar on which are mounted actuator latches for each product installed in the cabinet. These actuator latches engage the interlock actuator bracket on the rear of rackmount systems. When a rackmount system is pulled out of the cabinet, the actuator latches rotate to prevent any other rackmounted system that has an interlock actuator bracket from being pulled out of the cabinet.

Installing the Interlock Actuator Bracket

The interlock actuator bracket helps to prevent cabinet instability by allowing only one system at any one time to be pulled out of the cabinet. Install the interlock actuator bracket if the cabinet has an interlock system.

Note

In some cabinets the interlock bar in the cabinet may not engage the interlock actuator bracket properly. In these cases, do not install the interlock actuator bracket.

Warning

If the system chassis is installed in a cabinet without an interlock bar or the bar is not compatible with the system chassis interlock actuator bracket, it is the customer's responsibility to provide a stable cabinet.

Figure 3–10 shows how to mount the interlock actuator bracket. Mount the interlock actuator bracket ❶ at the rear of the system chassis ❷ using two M4 x 10 mm screws ❸.

Figure 3–10 Installing the Interlock Actuator Bracket

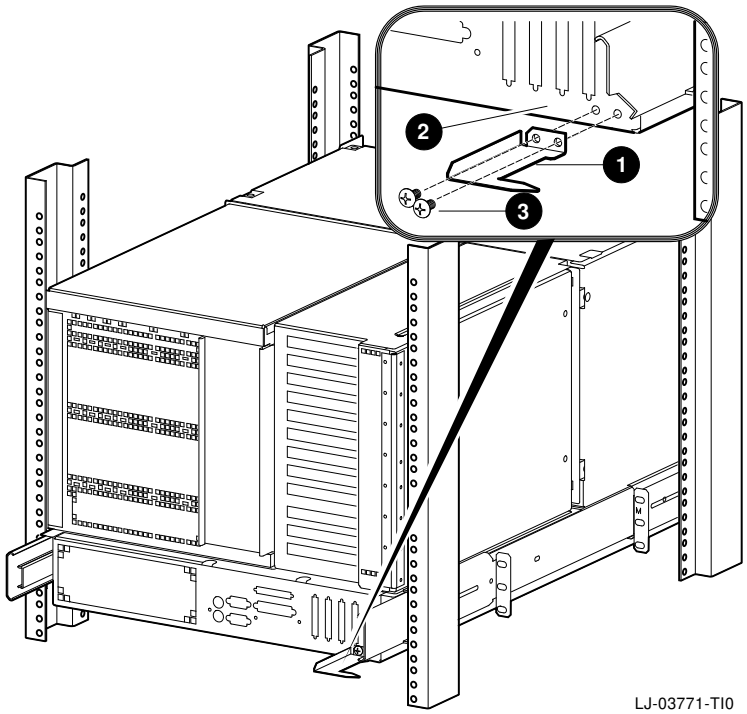

Installing the Interlock Actuator Latches

If additional products are installed into the cabinet, actuator latches for those products should be installed. To install actuator latches, refer to Figure 3–11 and proceed as follows:

1. Remove the screws securing the bottom mounting bracket to the cabinet ❹.
2. Slide the mounting bracket off the bottom of the vertical bar ❶.
3. Slide the stabilizer bracket ❺ for the new product onto the bottom of the vertical bar.
4. Slide the actuator latch ❷ for the new product onto the bottom of the vertical bar.
5. Replace the bottom mounting bracket ❹ and install the screws removed in step 1 but *do not* tighten them.
6. Position the stabilizer bracket so that the bottom hole in the stabilizer bracket ❻ aligns with the RETMA rail hole adjacent to the bottom of the installed product. This may require the loosening and sliding of other latches and stabilizer brackets to accommodate the new configuration.
7. Place the nut plate behind the RETMA rail and install and tighten the two 10-32 truss-head screws provided to secure the stabilizer bracket.
8. Position the new actuator latch ❷ to properly engage the interlock actuator bracket ❸, and tighten the two 6-32 set screws to secure the latch.
9. Now tighten the screws to secure the bottom mounting bracket ❹.

The expanded view (A) shows the position of the actuator latches when all systems are pushed into the cabinet. The expanded view (B) shows the position of all actuator latches after one system has been pulled out.

Warning

If a system chassis is installed without an interlock actuator bracket or the vertical bar in the cabinet does not engage properly with the system interlock actuator bracket, it is the customer's responsibility to provide a stable cabinet.

Figure 3–11 The Interlock System

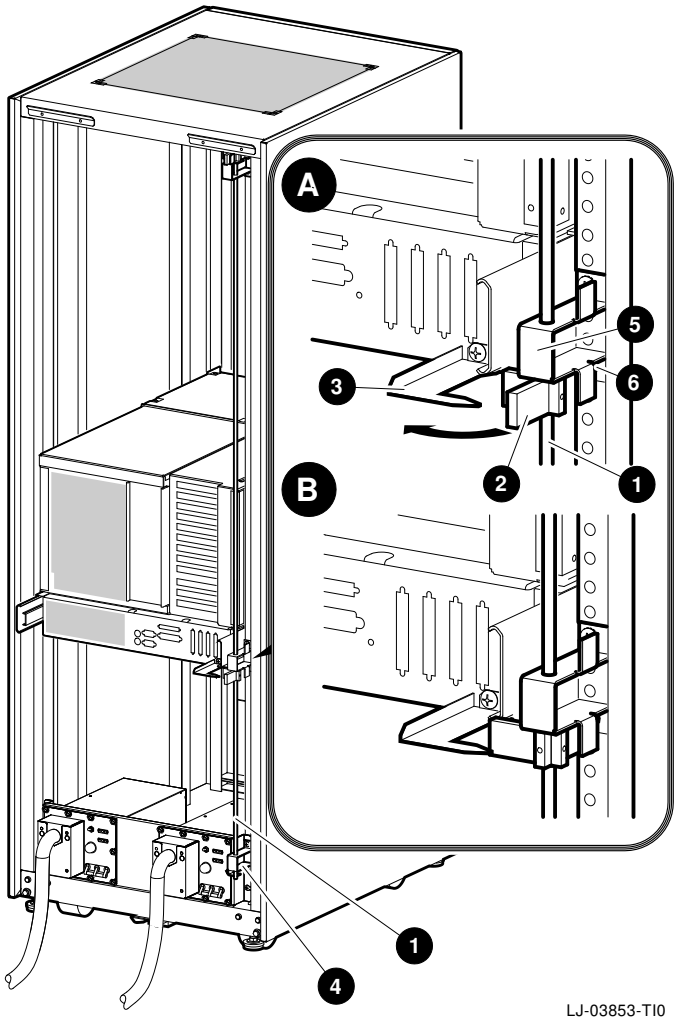

Installing the Cable Management System

The cable management system consists of two brackets (PN: 74-48882-01 and 74-48881-01) and cable tie wraps. When installed, the cable management system keeps the data cables and power cord(s) in place to prevent them from being damaged when the system chassis is pulled out or pushed into the cabinet.

To install the cable management system, refer to Figure 3–12 and proceed as follows:

1. Slide the system chassis into the cabinet.
2. Attach the system cable management bracket (PN: 74-48882-01) ❶ to the rear of the system using four M4 x 10 mm screws ❷.
3. In a cabinet with the English RETMA mounting hole pattern, locate the 12th and 15th rear cabinet rail mounting holes in the installation area established in the Determining the Installation Area (English RETMA) section (refer to Figure 3–5).

   In a cabinet with the metric RETMA mounting hole pattern, locate the 9th and 10th rear cabinet rail mounting holes in the installation area established in the Determining the Installation Area (Metric RETMA) section (refer to Figure 3–6).
4. Slide four U-nuts ❸ over the appropriate holes for a cabinet with the English RETMA or metric RETMA rail-hole pattern.
5. Attach the cabinet cable management bracket (PN: 74-48881-01) ❹ to the rear cabinet rails using four 10-32 truss-head screws ❺.

Figure 3–12 Installing the Cable Management Brackets

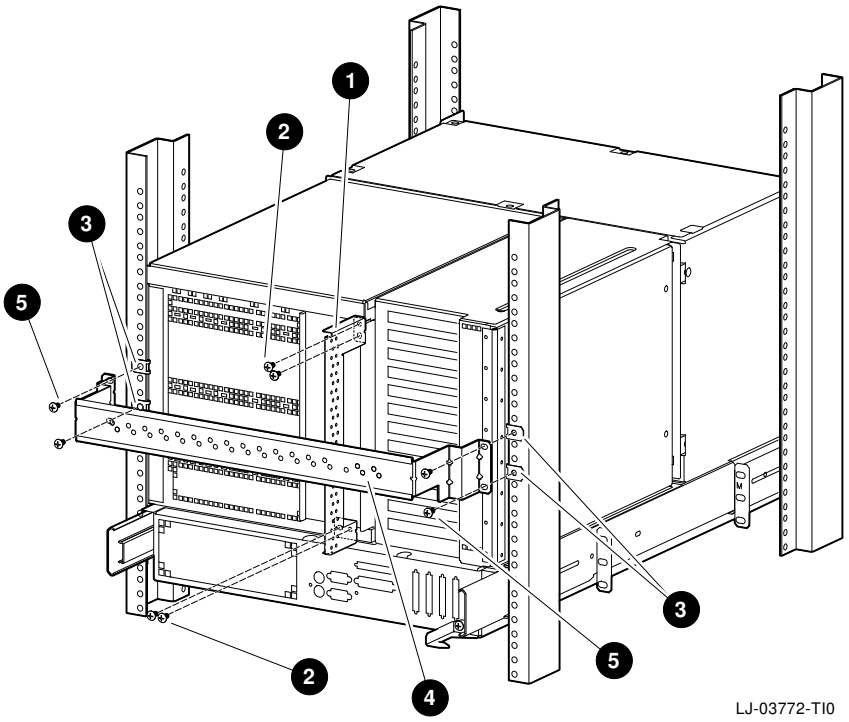

Cable Routing Guidelines

When routing the data cables and power cord(s) from the system to other devices, use the following guidelines:

1. Route the data cables from the system rear ports up the system cable management bracket on the rear of the system and secure them to the bracket using cable tie wraps. There are holes in the bracket for this purpose.

   Refer to Figure 3–13 for an example of how a data cable connected to the SCSI port and a power cord would be attached and routed using the two cable management brackets.

   Warning

   To prevent any equipment damage and possible injury, ensure that the cabinet is stabilized before pulling the system out of the cabinet.

2. Pull the system out of the cabinet to the full travel of the slides.
3. Route the data cables over the top of the cabinet cable management bracket. Attach these data cables along the outside of the cabinet cable management bracket using cable tie wraps (refer to Figure 3–13).

   Ensure that there is enough slack in the data cables to prevent stress (pulling) where the data cables are attached to the two cable management brackets.
4. Attach the power cord(s) to the cabinet cable management bracket using cable tie wraps (refer to Figure 3–13).

   Ensure that there is enough slack in the power cord(s) to prevent stress (pulling) where the power cord(s) are attached to the two cable management brackets.
5. Route the data cables and power cord(s) to the appropriate equipment for connection. The routing of these data cables and power cord(s) is dependent on the location of the power source and the network, peripheral, and terminal connections described in Chapter 4.

Figure 3–13 Example of Cable Routing

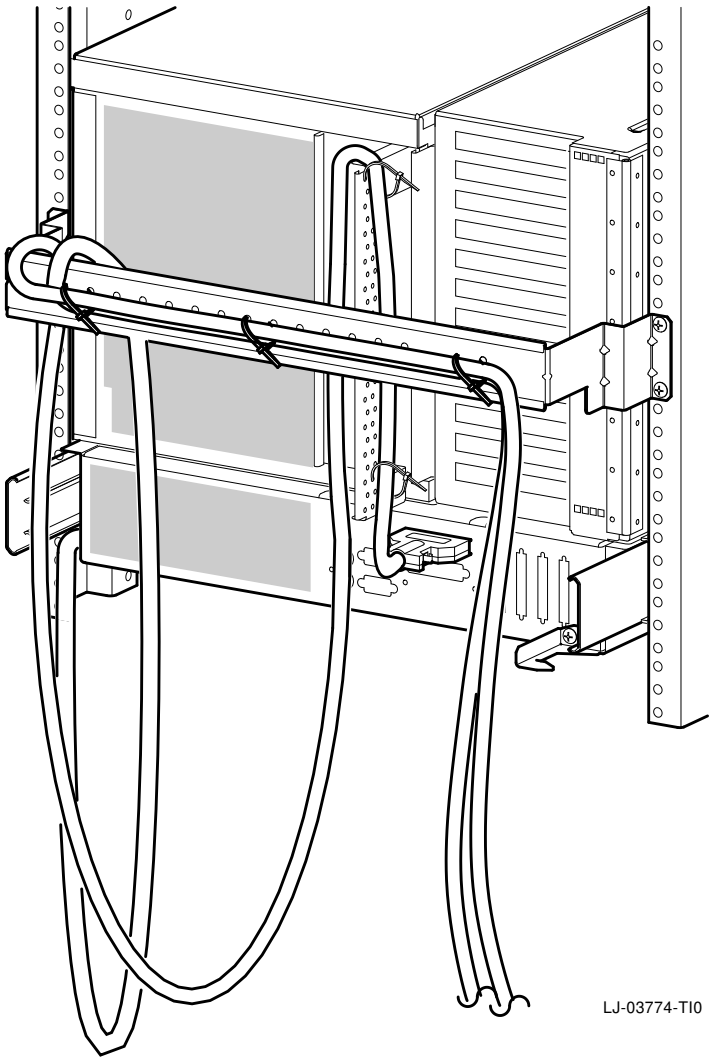

Installing Extender Cables

The two 5 m (16.4 ft) keyboard/mouse/VGA extender cables are used with AlphaServer 2100A RM series systems to extend the keyboard, mouse, and VGA cables, and to allow the keyboard, mouse, and VGA to be located *outside* the system equipment cabinet.

Use Figure 3–14 and the following procedure to install the keyboard/mouse/VGA extender cables:

1. Open the rear door of the equipment cabinet to access the rear of the rackmount AlphaServer 2100A chassis.
2. Connect the male end of one of the extender cables to the keyboard connector ❶ on the rear of the rackmount AlphaServer 2100A chassis.
3. Route this extender cable to the cable management bracket ❷ on the rear of the rackmount AlphaServer 2100A chassis and secure it to the bracket using cable tie wraps.
4. Route this extender cable to the cabinet cable management bracket ❸ and secure it along the outside of the bracket using cable tie wraps.

Caution

Ensure that there is enough slack in the extender cable to prevent stress (pulling) where the extender cable is attached to the two cable management brackets when the chassis is fully extended on the slides.

5. Route this extender cable down and out through the cable egress area located at the bottom rear of the equipment cabinet.
6. Connect the female end of the keyboard extender cable ❹ to the keyboard cable ❺.
7. Connect the male end of the other extender cable to the mouse connector ❻ on the rear of the rackmount AlphaServer 2100A chassis.
8. Route this extender cable to the cable management bracket ❷ on the rear of the rackmount AlphaServer 2100A chassis and secure it to the bracket using cable tie wraps.

9. Route this extender cable to the cabinet cable management bracket ❸ and secure it along the outside of the bracket using cable tie wraps.

Caution

Ensure that there is enough slack in the extender cable to prevent stress (pulling) where the extender cable is attached to the two cable management brackets when the chassis is fully extended on the slides.

10. Route this extender cable down and out through the cable egress area located at the bottom rear of the equipment cabinet.
11. Connect the female end of the mouse extender cable ❼ to the mouse cable ❽.
12. Close the rear door of the equipment cabinet.

Figure 3–14 Installing the Keyboard/Mouse/VGA Extender Cables

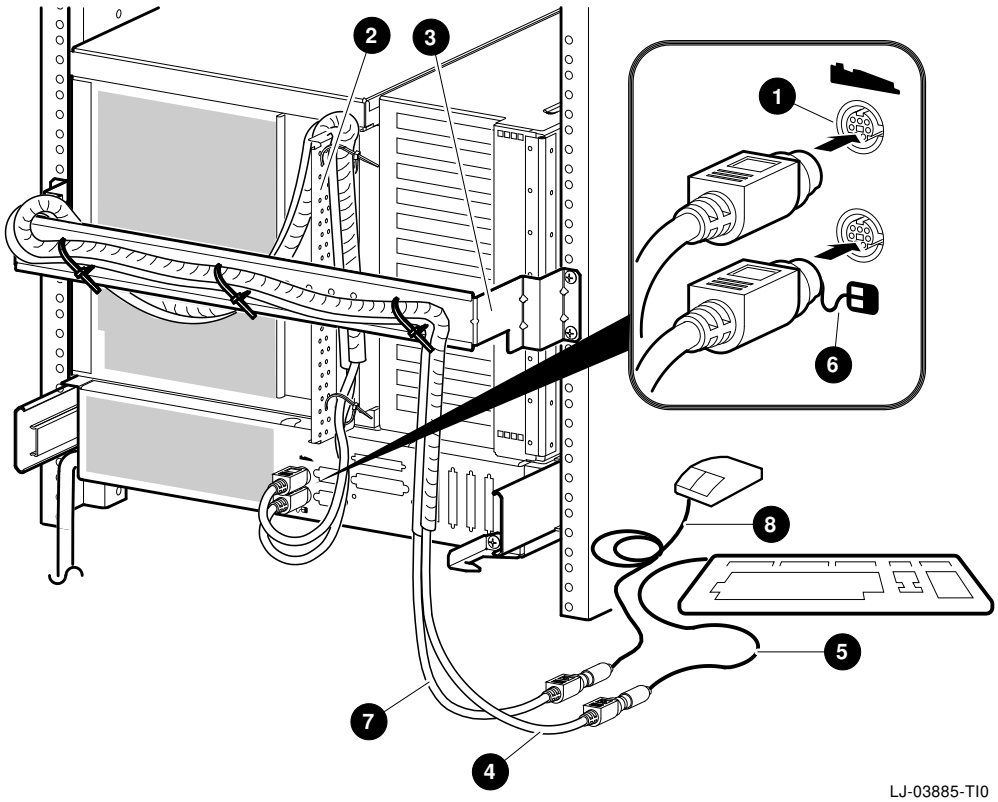

Expanding the System

Figure 3–15 shows cable expansion ports for SCSI and/or DSSI options.

Figure 3–15 Optional SCSI RAID and/or DSSI Breakout Ports

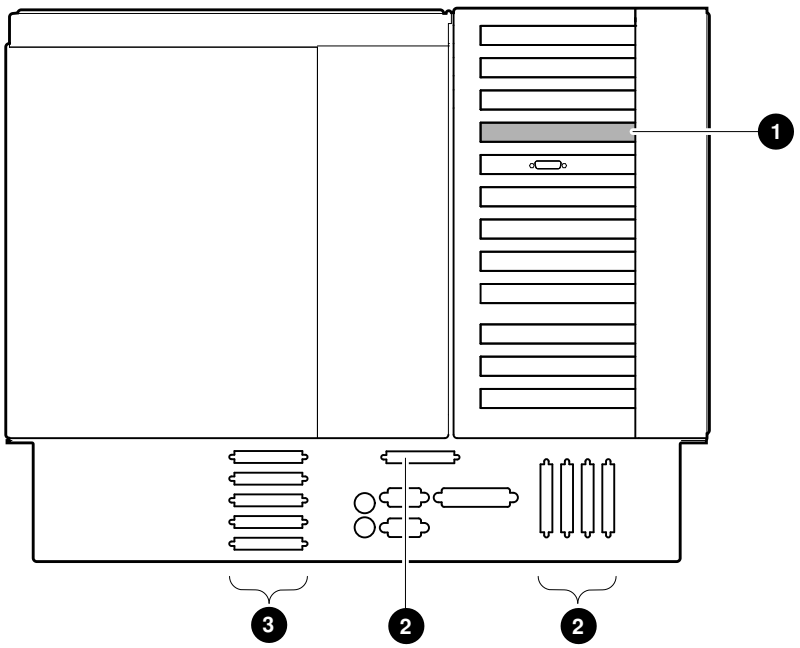

❶ PCI or EISA bulkhead egress
❷ For 50-conductor connecting narrow SCSI or DSSI
❸ For 68-conductor connecting wide SCSI

Installing and Removing the Front Bezel

The front bezel provides protection to the front of the system.

Installation

To install the front bezel, refer to Figure 3–16 and proceed as follows:

Note

To connect or disconnect the power cord to the system AC connector, the front bezel must be off.

1. Align the ball-stud receivers ❶ on the front bezel ❷ with the ball studs ❸ on the front of the system.
2. Press the front bezel ❷ into place.

Removal

To remove the front bezel ❷, press in at the bottom of the two pull loops ❹ on the bezel to rotate them down and out from the bezel. Then, using the two pull loops, pull the bezel away from the system.

Figure 3–16 Installing/Removing the Front Bezel

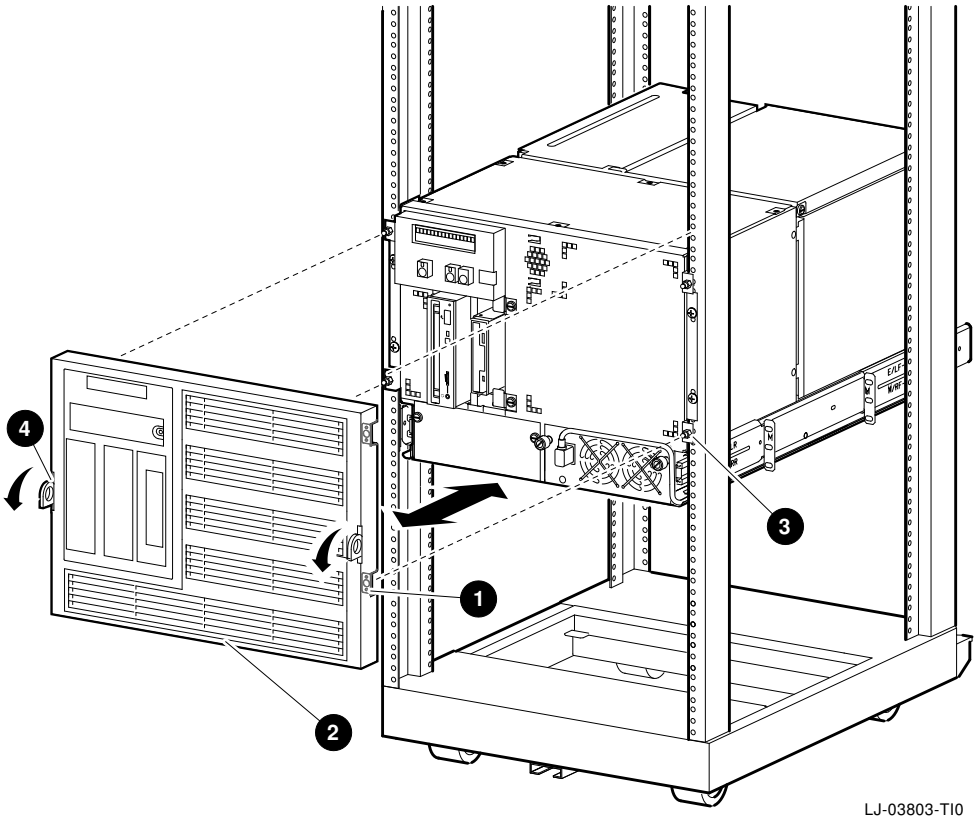

4

Setup and Basic Operation

In This Chapter

This chapter describes the setup and basic operation of the AlphaServer 2100A RM and CAB systems. Most operational features are identical to the AlphaServer 2100A pedestal system. For information on the following operational topics, see the *AlphaServer 2100A Owner's Guide*.

- Preboot tasks such as checking environment variable settings and verifying the configuration
- Booting the operating system
- Operating removable storage devices

Connecting the Monitor or Terminal

You can connect either a graphics monitor or a Digital VT–series terminal (VT320 minimum) to the system. You connect the two types of devices differently, as shown in Figure 4–1. Make sure the DC power to the system is turned off before connecting a monitor or terminal.

- Connect a graphics monitor to an available PCI or EISA bulkhead slot at the rear of the system. Windows NT systems require a graphics monitor.

  Note

  The cable that connects to the rear of the VGA monitor may have multiple plugs. These plugs are either color-coded or coded by letters that indicate the color. Use the coding on the cable and the corresponding coding on the monitor to determine where to attach each cable plug.

- Connect a VT-series terminal to the COM1 serial port at the rear of the system. Use the H8571-J adapter to make the connection. The adapter is included with the system.

For information about connecting a specific monitor or terminal to your system, refer to the documentation for that device.

Connecting the Keyboard and Mouse

Connect the keyboard and mouse into their respective ports on the rear of the system, as shown in Figure 4–1. Make sure the DC power to the system is off before connecting the keyboard and mouse.

Figure 4–1 Connecting Monitor, Keyboard, and Mouse

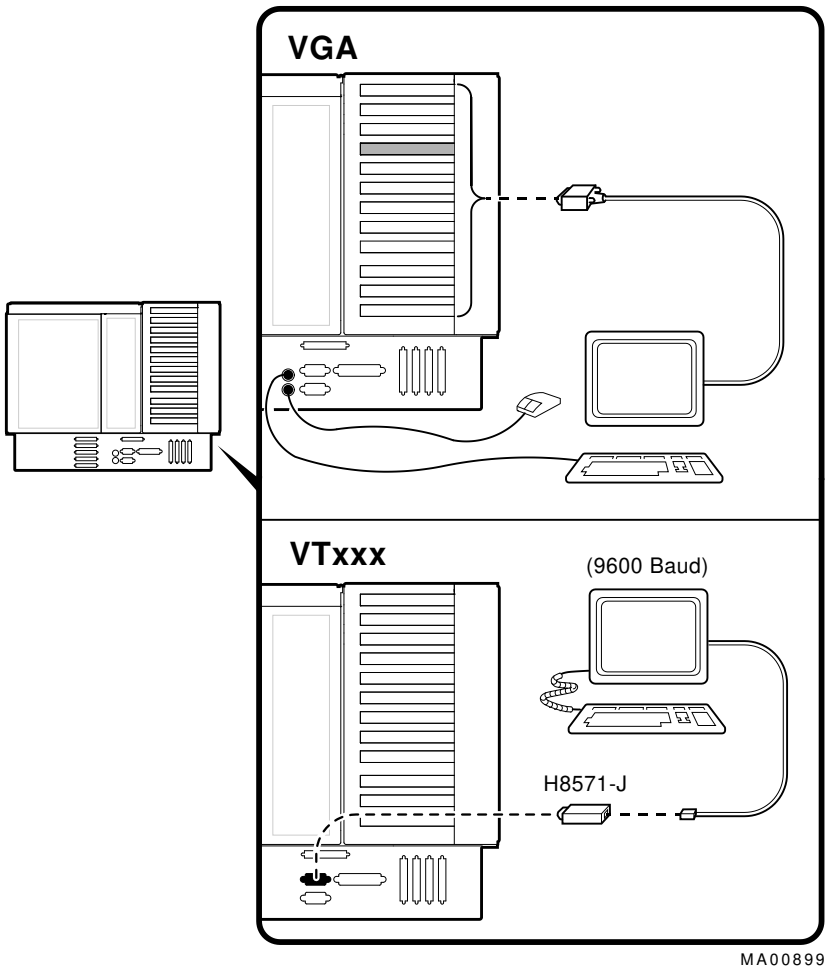

ZLXp-E Graphics Accelerator (PBXGA)

If you purchased a ZLXp-E PCI graphics accelerator card for your computer, you need to set an environment variable so that the monitor will synchronize.

The correct setting, displayed with the `show` command is:

```
P00>>> show tga_sync_green
tga_sync_green        0
```

If your monitor does not synchronize, set the parameter as follows:

```
P00>>> set tga_sync_green 00
```

This command sets all graphics cards to synchronize on a separate vertical SYNC line, as required by some monitors. See your monitor documentation for all other information.

Connecting Peripherals

Serial/Parallel Connections

You connect a serial or parallel printer, modem, or console terminal to your system through the serial and parallel ports at the rear of the system, as shown in Figure 4–2. Before connecting serial or parallel devices to the system, turn off the DC power to the system.

- COM1 is an EIA-232 asynchronous serial port for a VT320 or higher (or equivalent) console terminal.
- COM2 is an EIA-232 asynchronous serial port for a modem that connects to an auxiliary console device.

Note

Use the H8571-J adapter to make the connection to COM1 or COM2.

- The parallel port is the port for connecting a printer.

For information about connecting a specific device to your system, refer to the documentation for that device.

Figure 4–2 Connecting Serial and Parallel Devices

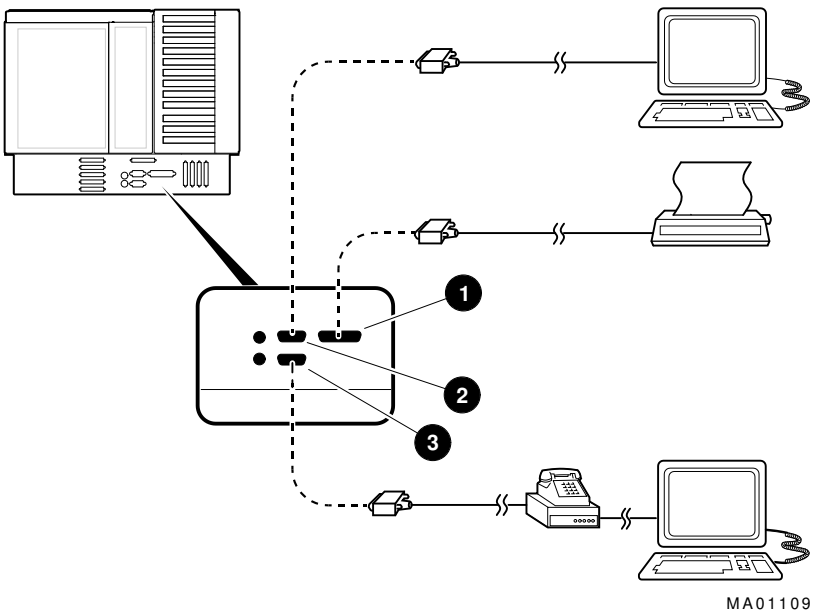

❶ Parallel port

❷ Serial port (COM1) (console terminal)

❸ Serial port (COM2) (auxiliary console device)

Network Options

An Ethernet adapter is included with the system that allows you to connect the computer to Ethernet/IEEE 802.3. You can connect ThinWire, AUI, or twisted-pair Ethernet cables. Figure 4–3 shows the cable connection.

For information on setting an Ethernet controller to run a ThinWire, AUI, or twisted pair Ethernet network, refer to the ''set ew*0_mode'' command section in the *AlphaServer 2000/2100 /2100A Firmware Reference Guide*.

For more information on the Ethernet adapter, consult the adapter documentation that came with your system.

Figure 4–3 Ethernet Cable Connection

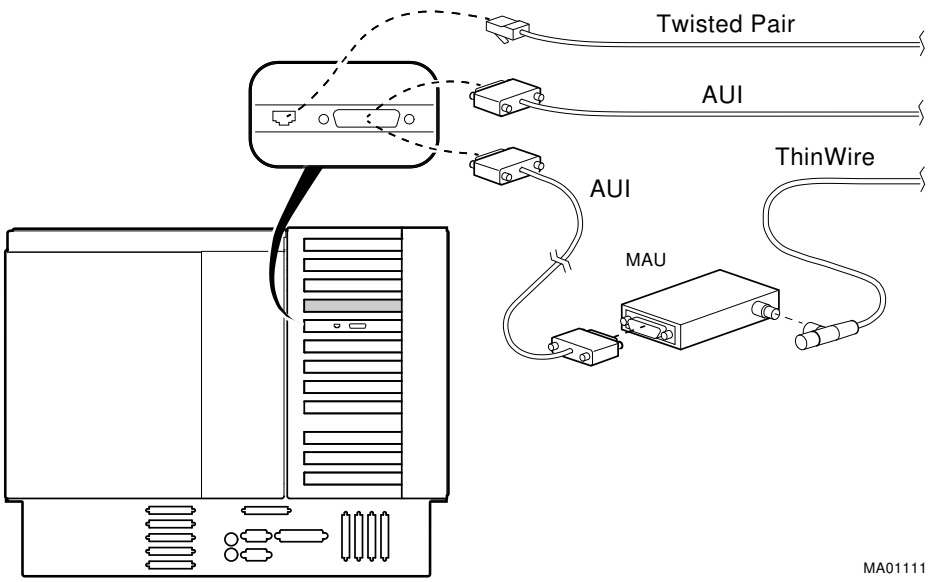

Turning the System On

Overview

Turning on the system involves the following major steps:

1. Checking the system settings
2. Applying power to the system
3. Checking the diagnostic indicators
4. Performing pre-boot tasks, if desired
5. Booting the operating system

Note

Pre-boot tasks and the basic boot procedure are described in the *AlphaServer 2100A Owner's Guide*.

Before You Begin

To perform some of the instructions in this procedure, the operator control panel door will need to be opened. The key used to lock and unlock the operator control panel door is shipped with the system. The keylock on the front of the system is shown in Figure 1–5.

Checking the System Settings

Before turning the system on, ensure that the DC On/Off button is off (O) and the Halt button is in the ‘‘out’’ position, as shown in Figure 4–4.

Figure 4–4 Powered-Down System Settings

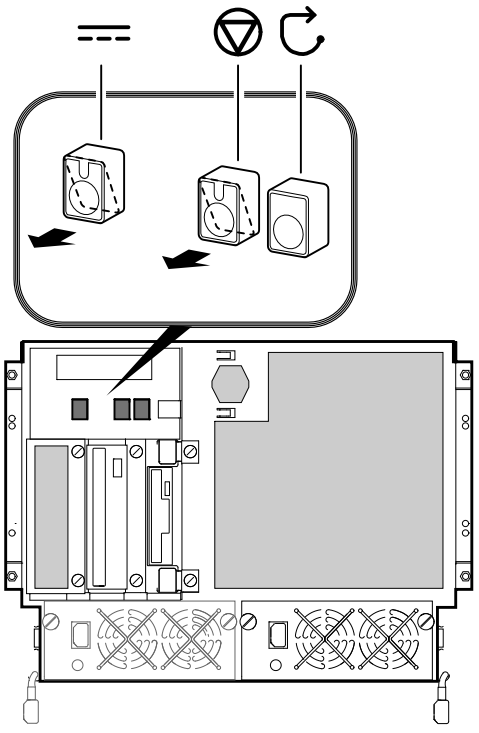

Applying Power to the System

Apply power to the system as shown in the order shown in Figure 4–5.

❶ Terminal

❷ Power supply

❸ Second power supply, if present

❹ System DC On/Off switch

Note

If there are any external expansion boxes connected to the system, such as expansion boxes that house storage devices, turn the power on to those devices first before applying power to the system.

Figure 4–5 Applying Power to the System

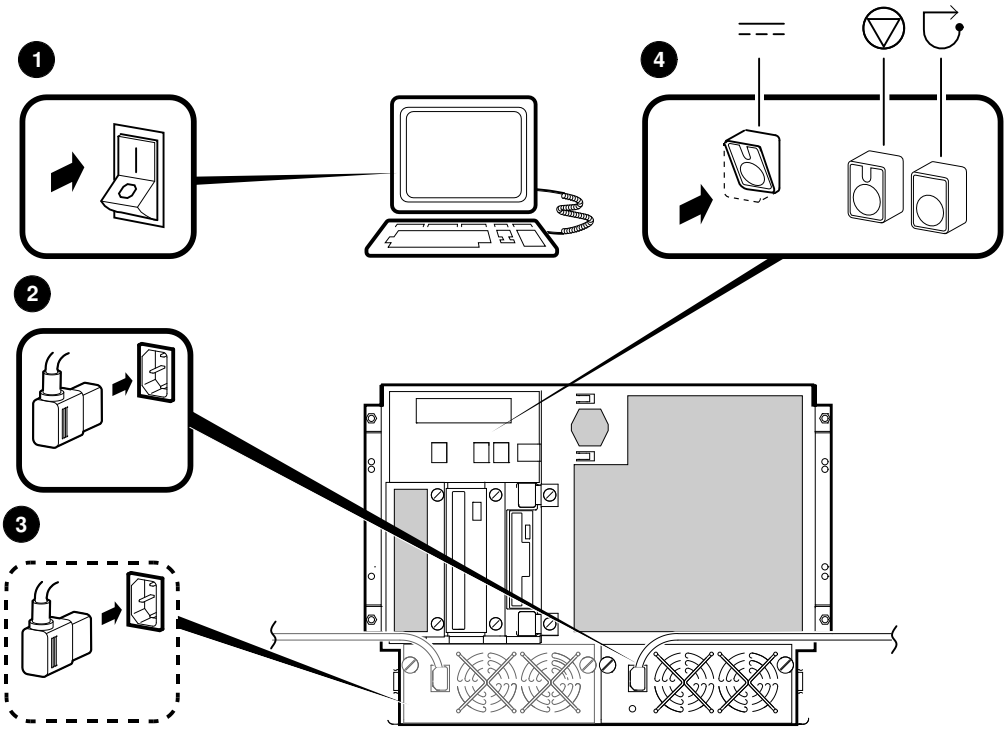

LJ-03775-TI0

Displaying Power-Up Information

Power-up information is displayed on the system's console terminal. The console terminal may be either a graphics monitor connected to the VGA module at the rear or the system or a serial terminal connected through the COM1 serial port. The setting of the ''console'' environment variable determines where the system will display power-up output.

The default setting of the ''console'' environment variable is ''graphics.'' If you are using a VT-series terminal as your console terminal, the power-up display will be blank. Press Return to enter console mode, then set the ''console'' environment variable to ''serial.'' This will route the power-up screen to the COM1 serial communication port.

The following example shows the command to set the console to display power-up output to a serial terminal. Note that you must initialize the system after setting the ''console'' environment variable. For more information, see the *AlphaServer 2000/2100 /2100A Firmware Reference Guide*.

Example:

```
P00>>> set console serial
P00>>> init
 . . .
```

Checking the Diagnostic Indicators

After the system is turned on, check the status of three diagnostic indicators (refer to Figure 4–6): the power-up /diagnostic display ❶ on the operator control panel, the system startup screen ❷, and the console prompt ❸ (Digital UNIX or OpenVMS systems) or Boot menu (Windows NT systems).

If any of the diagnostic indicators do not appear as described, refer to Chapter 6 for help.

Figure 4–6 System Startup Diagnostic Indicators

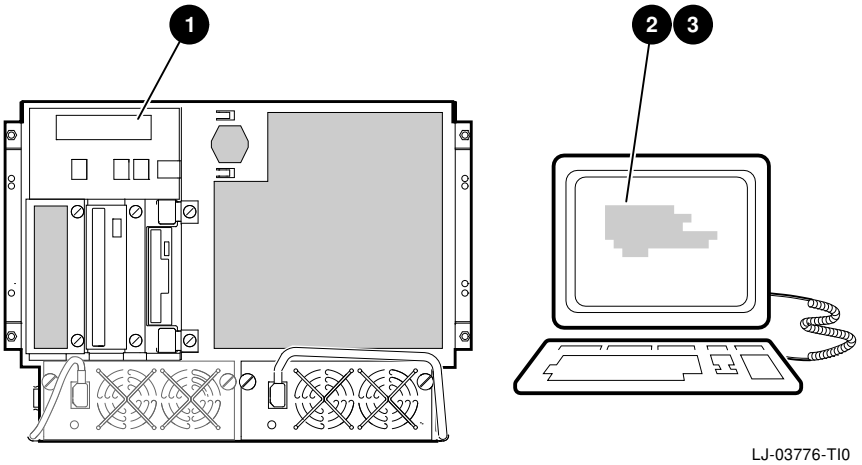

Power-Up/Diagnostic Display

The power-up/diagnostic display located on the operator control panel on the front of the system displays the results of system self-tests during power-up.

As self-tests begin, the power-up/diagnostic display displays the following message:

`starting console on CPU`*n*

When the system has completed self-tests, the message `Model n/nnn` is displayed, where *n* represents the CPU variant and *nnn* represents the system model number—for example, Model 5/300. You can customize this message by changing the value of the ocp_text environment variable. Refer to the ‘‘set ocp_text’’ section in the *AlphaServer 2000/2100/2100A Firmware Reference Guide*.

Table 6–4 explains the messages that may appear on the power-up display.

Table 4–4 Interpreting Operator Control Panel Power-Up Display

Message	Meaning
TEST	Displayed while the system performs diagnostic tests and exercisers. The type of module under test, its slot number, and the currently executing test number, are also displayed.
NO MEM INSTALLED	Displayed if you power up with no memory installed.
FAIL *module_type*	If an error is detected in the CPU, memory, or I/O, a failure message is displayed and the Halt button LED lights for a few seconds. The error is logged to the appropriate module via the serial control bus. In nearly all cases, the power-up tests continue. The *module_type* and slot number for the module that failed, along with the test number that detected the error, are also displayed. Module types and/or slot numbers: CPU_nn — CPU module (0, 1, 2, or 3) MEM_nn — Memory module (0, 1, 2, or 3) I/O_0 — I/O backplane or system backplane
CPU STATUS	Summary of CPU testing—The status of each CPU from right to left, starting with CPU0 is displayed: ''P'' — CPU passed ''F'' — CPU failed ''–'' — CPU not present
STARTING CPU #	The console is starting the primary CPU.
CONSOLE STARTED	The SRM console has been unloaded from flash ROM and has assumed control of the system.
TEST MEM BANK #	The console is testing memory.
PROBE I/O SUBSYS	The console is checking the PCI and EISA bridges.
SYSTEM RESET	The Reset button has been pressed.

(continued on next page)

Table 4–4 (Cont.) Interpreting Operator Control Panel Power-Up Display

Message	Meaning
`Model n/nnn`	When the system is under operating system control, the CPU variant (*n*) and system model number (*nnn*) are displayed unless you supply your own text using the ocp_ text environment variable.
`21164 TIMEOUT`	An Alpha 21164 microprocessor IBOX time-out occurred.
`3.3V/CLOCK FAIL`	A voltage or clock failure occurred on the CPU module.
`MEM_yy NVR ERROR`	A checksum error occurred in the memory NVRAM.

System Startup Screen

The system startup screen will scroll. To redisplay the messages that scroll by, enter the `more el` command when the `P00>>>` console prompt is displayed. This command lists the contents of the event log file to the console terminal one screen at a time.

Note

If your system is configured to run Windows NT, you will need to switch to the SRM console if you wish to use the `more el` command. See the section ''Switching from ARC to SRM'' in this chapter.

The screen will look similar to the following example:

```
VMS PALcode X5.48-112, OSF PALcode X1.35-81

starting console on CPU 0
Testing Memory bank 0
Testing Memory bank 1
Testing Memory bank 2
Testing Memory bank 3
Configuring Memory Modules
probing hose 0, PCI
probing PCI-to-PCI bridge, bus 1
probing PCI-to-PCI bridge, bus 2
bus 1, slot 1 -- pka -- NCR 53C810
bus 2, slot 0 -- ewa -- DECchip 21040-AA
bus 2, slot 1 -- pkb -- QLogic ISP1020
bus 2, slot 2 -- pkc -- QLogic ISP1020
bus 0, slot 8 -- vga -- S3 Trio64/Trio32
probing hose 1, EISA
starting console on CPU 1
Memory Testing and Configuration Status
Module   Size    Base Addr   Intlv Mode  Intlv Unit  Status
------   -----   ---------   ----------  ----------  ------
  0      128MB   00000000      1-Way         0       Passed
Total Bad Pages 0
Testing the System
Testing the Disks (read only)
Testing the Network
AlphaServer 2100A Console V4.3-130, built on Oct 26 1995 at 19:44:57
P00>>>
```

Console Prompt or Main Menu

The next display on your console terminal is either a console prompt or a Boot menu, depending on the operating system the system is configured to run.

- If the system is configured for Digital UNIX or OpenVMS, the following console prompt should be displayed:

  ```
  P00>>>
  ```

- If the system is configured for Windows NT, the Boot menu should be displayed.

Example 4–1 Boot Menu Example

```
ARC Multiboot Alpha Version n.nn
Copyright (c) 1993--1995 Microsoft Corporation
Copyright (c) 1993--1995  Digital Equipment Corporation

Boot menu:

   Boot Windows NT
   Boot an alternate operating system
   Run a program
   Supplementary menu...

Use the arrow keys to select, then press Enter.
```

Note

If neither a console system prompt or a Boot menu is displayed, press Return several times.

If the screen display on your terminal does not correspond to the operating system that you plan to boot, switch to the other console firmware as described in the next section.

Bootstrap Firmware

The console terminal displays are controlled by the computer's console subsystem, which contains firmware code (software code embedded in the hardware) that controls system initialization and bookstrapping.

There are two versions of the firmware. ''SRM'' firmware supports the Digital UNIX and OpenVMS operating systems. ''ARC'' firmware supports the Microsoft Windows NT operating system. Consult the *AlphaServer 2000/2100/2100A Firmware Reference Guide* for detailed information on the console firmware.

Switching from SRM to ARC

To switch from the SRM console to the ARC console, enter the `arc` command as follows:

```
P00>>> arc
```

Once the console firmware is loaded and the system is initialized, the Windows NT Boot menu is displayed.

Switching from ARC to SRM

To switch from the ARC console interface to the SRM console interface, perform the following steps:

1. From the Boot menu, select the Supplementary menu.
2. From the Supplementary menu, select Set up the system.
3. From the Setup menu, select Switch to OpenVMS or Digital UNIX console.
4. Select the operating system, then select the Setup menu and press Enter.
5. When the message ‘‘Power-cycle the system to implement the change’’ is displayed, press the Reset button.

Once the console firmware is loaded and the system is initialized, the SRM console prompt `P00>>>` is displayed.

Turning Off the System

Before You Begin

You may not need to power down the system to recover from some hangs and other problems. First try pressing the Reset button on the operator control panel.

Turning Off DC Power

To turn off your system:

1. Shut down the operating system. Refer to the shutdown procedure in your operating system documentation.
2. Press the DC On/Off button to the ‘‘off’’ (O) position, as shown in Figure 4–7.
3. Set the Halt button to the ‘‘out’’ position. If the Halt button is in, the system will not boot when you power up.

Figure 4–7 Turning Off the System

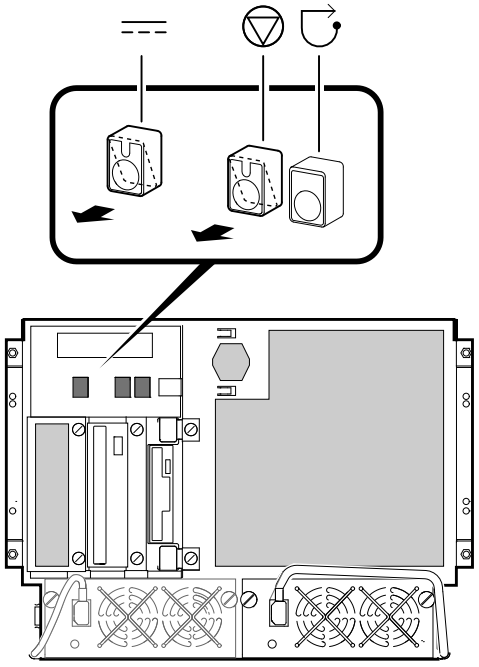

LJ-03777-TI0

Extended Power-Down (AC Power)

To shut down the system for an extended period:

1. Turn off the DC power as described in the previous section.
2. Remove the system power plugs (Figure 4–8).

Warning

If two power supplies are present, unplug the AC power cord from each power supply. Power supply fans continue to run for about 10 seconds after power is removed.

Figure 4–8 Turning Off the AC Power

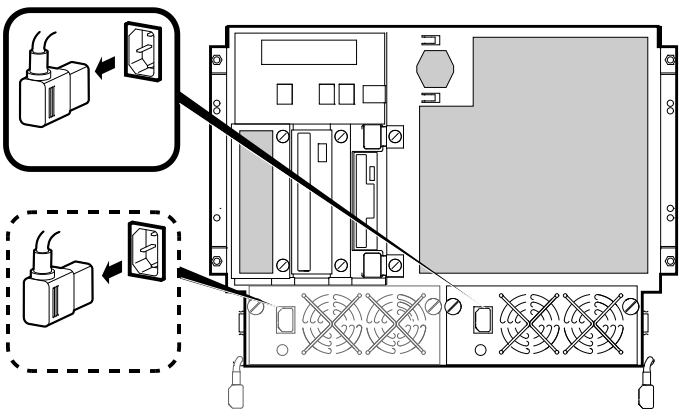

Console Mode

A console terminal is required for your system. You can connect either a graphics monitor or a Digital VT-series terminal or equivalent. The console terminal is used to configure the system and boot the operating system. From the console terminal, you can issue commands to the system when the operating system is not running.

Console mode is the state in which the system and the console terminal operate under the control of the console firmware rather than the operating system. When you issue commands from the console terminal and firmware is executing, the system is in console mode.

On Digital UNIX and OpenVMS systems, the SRM console mode prompt is `P00>>>`. You can use control characters and supported keys to enter console commands at the console mode prompt, as described in the *AlphaServer 2000/2100/2100A Firmware Reference Guide*.

On Windows NT systems, a menu interface is used in console mode.

Invoking Console Mode

Invoke console mode by shutting down the operating system according to the operating system shutdown procedure described in your operating system documentation.

- Pressing the Halt button on the operator control panel invokes console mode if you are running Digital UNIX or OpenVMS. However, invoke console mode with the Halt button only if you are unable to shut down the Digital UNIX or OpenVMS operating system using the proper shutdown procedure.
- Pressing the Halt button has no effect if you are running Windows NT.

Remote Console Access

If you are running Digital UNIX or OpenVMS, you can invoke console mode from a remote terminal.

1. Connect the remote terminal to the system through the COM1 or COM2 port at the rear of the system (refer to Figure 4–2). Use the H8571-J adapter to make the connection.
2. Shut down the operating system.
3. When the shutdown has completed, press Return. The console prompt `P00>>>` is displayed.

5

Configuring the System

In This Chapter

This chapter describes configurations for the following on the AlphaServer 2100A RM and CAB systems:

- System bus options (CPU and memory)
- SCSI bus
- Power supplies

Note

Except for the areas covered in this chapter, system configuration for the rackmount and cabinet systems is identical to that of the pedestal system. For information on the following topics, refer to the *AlphaServer 2100A Owner's Guide*.

- Verifying system configuration using SRM console commands or ARC menu items
- Configuring EISA/ISA options with the EISA Configuration Utility
- Configuring PCI options
- Planning system upgrades

System Bus Options

The system bus interconnects the CPUs and memory modules. It is the hardware structure through which data processed by the microprocessor is transferred throughout the system. Figure 5–1 shows the location of the system bus and system bus options.

The AlphaServer 2100A RM series system supports options for PCI and EISA bus architectures. Locations of PCI and EISA slots are shown in Figure 5–1.

Figure 5–1 System Bus Option Locations

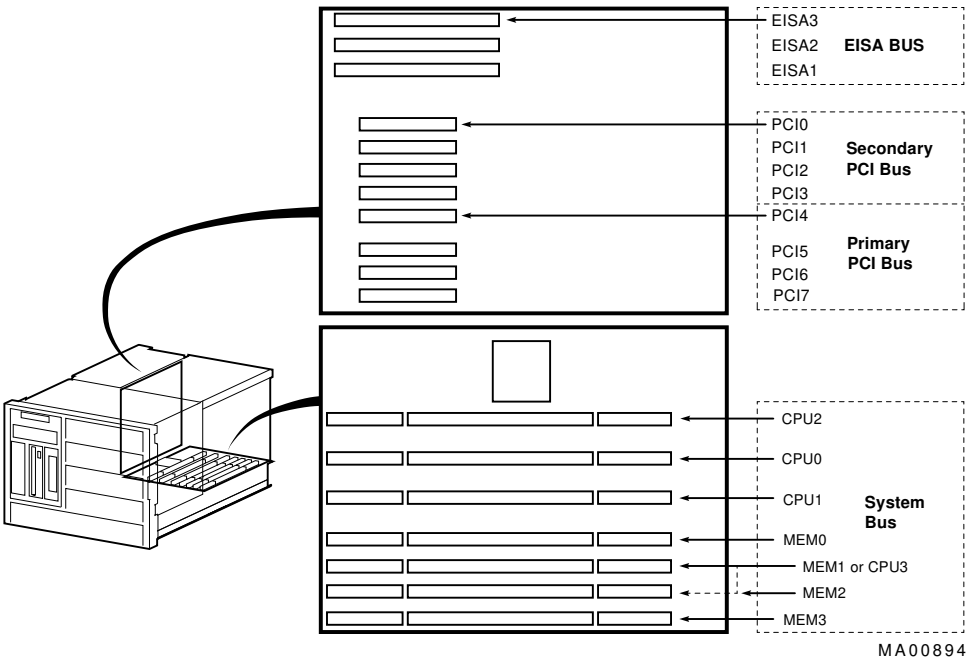

CPU Modules

The system can support up to four CPU modules in a symmetric multiprocessing (SMP) configuration. Figure 5–2 shows the supported system bus configurations depending on the number of CPUs in the system. Configure the CPUs exactly as shown in the illustration to ensure proper system functioning. Also make note of the following requirements:

- The system must have a CPU module installed in slot CPU0.
- When installing four CPUs, install the fourth CPU in slot MEM 1. The fourth CPU displaces memory in slot MEM1 and MEM2, as shown in Figure 5–2.

Warning

Before installing a CPU module, turn off all power to the system (both AC and DC). Refer to Turning Off the System in Chapter 3 for information about turning off AC and DC power.

Warning: CPU and memory modules have parts that operate at high temperatures. Wait two minutes after power is removed before handling these modules.

For information on CPU upgrades, see the *Digital Systems and Options Catalog*.

Figure 5–2 System Bus Configurations According to the Number of CPUs

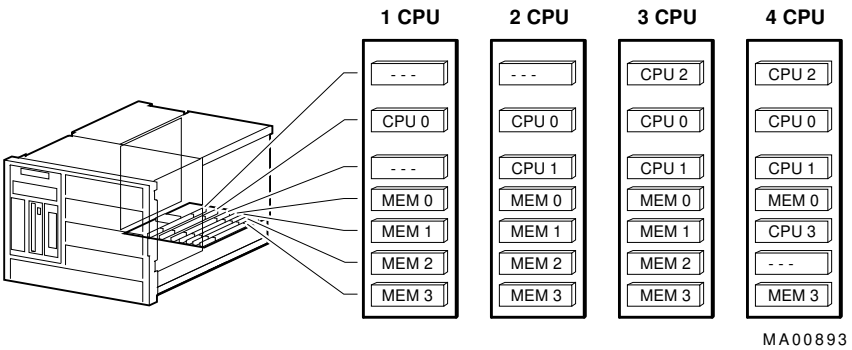

Memory Modules

The AlphaServer 2100 RM system can support up to four memory modules for a total of 2 gigabytes of memory. A minimum of one memory module is required. The system supports 64-MB, 128-MB, and 512-MB memory modules.

For information on memory upgrades, see the *Digital Systems and Options Catalog*.

Warning

Before installing a memory module, turn off all power to the system (both AC and DC). Refer to Turning Off the System in Chapter 3 for information about turning off AC and DC power.

SCSI Buses

A PCI-based SCSI controller on the system backplane provides 8-bit Fast SCSI-2 support for removable media devices.

All tabletop or rackmounted SCSI-2 and SCSI-3 devices require a PCI- or EISA-based SCSI adapter. Use the following rules to determine if a device can be used on your system:

- The device must be supported by the operating system. Consult the *Wide SCSI Technical Bulletin* for supported Digital devices. This bulletin is frequently updated and can be downloaded from the Internet, as noted in the Preface of this document. Consult your controller documentation for configuration requirements.
- No more than seven (7) devices can be on any one SCSI controller, and each must have a unique SCSI ID.
- The entire SCSI bus length, from terminator to terminator, must not exceed 6.0 m (19.7 ft) for single-ended SCSI-2 or SCSI-3 at 5 MB/s, or 3.0 m (9.8 ft) for single-ended SCSI-2 at 10 MB/s.

Native SCSI Bus

A PCI-based SCSI controller on the I/O backplane supports one or two hard-disk drives and up to two removable 13.3-cm (5.25-in.) half-height devices.

Internal SCSI Cables for RAID or DSSI Controller

A cable kit used with a multiport PCI or EISA RAID controller or with a DSSI controller consists of two cables and the associated mounting hardware. The SCSI port for channel 0 of the controller is on the rear bulkhead. The SCSI ports for channels 1 and 2 are provided by installing a cable kit to allow connections to ports at the rear of the system.

Installing a Cable Kit

To install a cable kit, refer to Figure 5–3 and the following procedure:

1. Orient the IDC end of the first cable, as shown in the top panel of Figure 5–3, so that it aligns with the channel 1 connector and insert the cable onto this connector on the RAID or DSSI controller.
2. Repeat the procedure in step 1 for the second cable, connecting it to channel 2 on the RAID or DSSI controller.
3. Insert the other ends of the cables through the slot in the bottom left of the cabinet, as shown in the top panel of Figure 5–3, and route them to the rear connector slots (A through D).
4. Remove the connector knock-outs from the rear connector slots that are to be used.
5. Insert the cable connectors into the proper slots and fasten them with the screws provided as shown in the bottom panel of Figure 5–3.

When cable kits are installed, SCSI devices can be connected to the SCSI ports (A through D) at the rear of the system in addition to the system bulkhead port.

Figure 5–3 Installing a Cable Kit

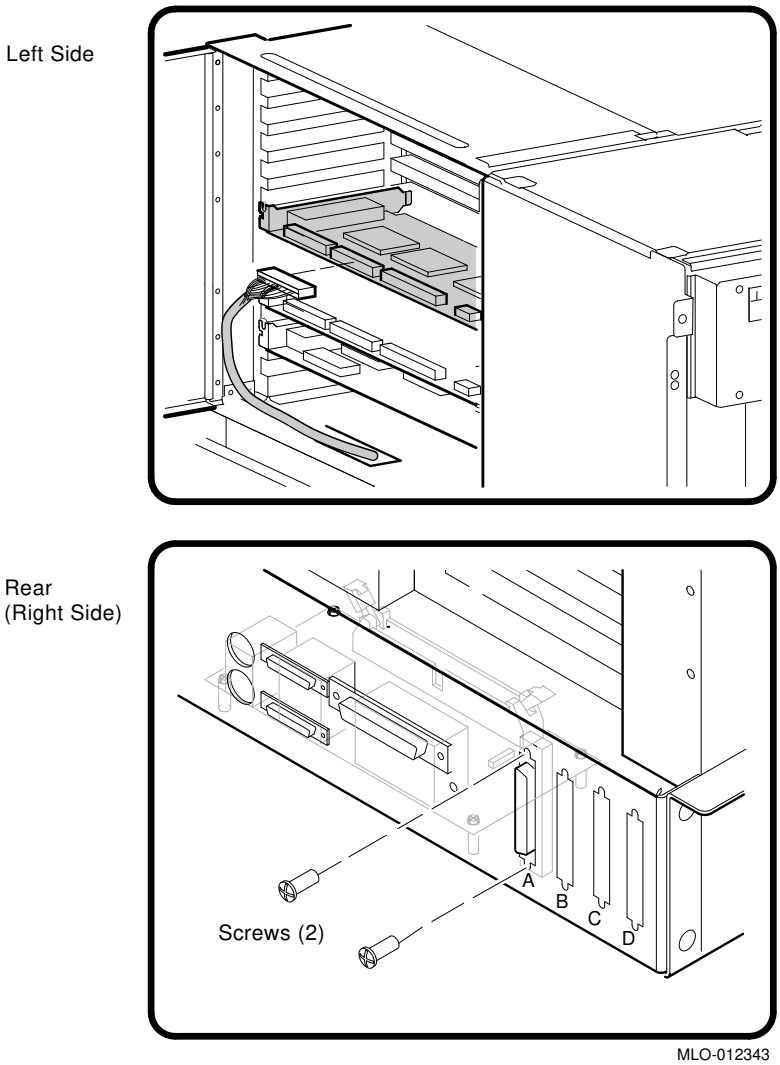

Installing Removable Media Storage Devices

Warning

Before installing a storage device, turn off all power to the system (both AC and DC). Refer to Turning Off the System in Chapter 3 for information about turning off AC and DC power.

To install a removable media device, refer to Figure 5–4 and proceed as follows:

1. Remove the front bezel as described in Installing and Removing the Front Bezel in Chapter 3.
2. Turn off all power to the system (both AC and DC). Refer to Turning Off the System in Chapter 3.

Warning

In the next step, ensure that the cabinet is stabilized before pulling the system out of the cabinet.

3. Remove the four 10-32 screws securing the system to the front cabinet rails (refer to Figure 3–9) and pull the system out of the cabinet.
4. Remove the top-front access cover shown in Figure 1–6.
5. Locate bracket holes A and B. For RRD*nn* or TLZ0*n*, use bracket holes A. For TZK11 drives use bracket holes B.
6. Attach the bracket ❶ to the drive ❷ using four M3 x 6 mm flat-head screws ❸ and the appropriate bracket holes (A or B).
7. Set the device's node ID so that there are no duplicate node IDs, as each device must have a unique node ID. Nodes 0–6 are available for drives, and node 7 is reserved for the host adapter. Refer to the device documentation on how to set the node ID on the device.
8. Insert the drive ❷ with the attached bracket into the appropriate slot and connect the drive cables ❹.

9. Secure the drive to the front of the system using two captive screws ❺.

Figure 5–4 Installing Removable Media

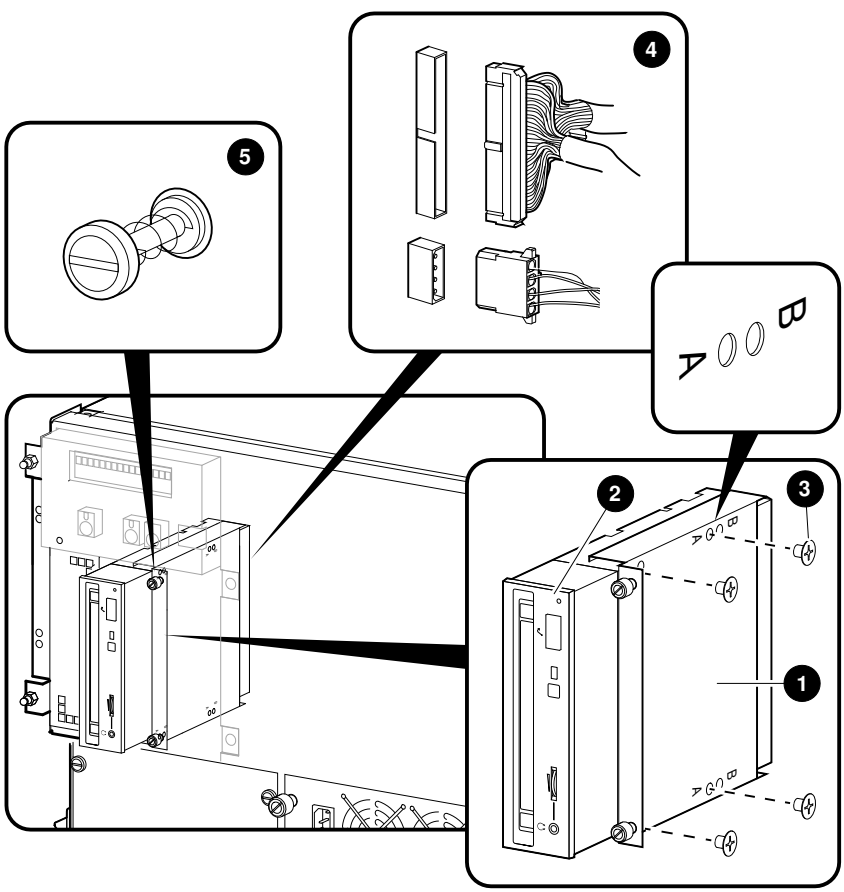

LJ-03844-TI0

Installing a Hard-Disk Drive

Warning

Before installing a storage device, turn off all power to the system (both AC and DC). Refer to Turning Off the System in Chapter 3 for information about turning off AC and DC power.

To install a hard-disk drive, refer to Figure 5–5 and proceed as follows:

1. Remove the front bezel as described in Installing and Removing the Front Bezel in Chapter 3.
2. Turn off all power to the system (both AC and DC). Refer to Turning Off the System in Chapter 3.

Warning

In the next step, ensure that the cabinet is stabilized before pulling the system out of the cabinet.

3. Remove the four 10-32 screws securing the system to the front cabinet rails (refer to Figure 3–9) and pull the system out of the cabinet.
4. Remove the top-front access cover shown in Figure 1–6.
5. Locate the four rubber grommets ❶ in the accessories kit.
6. Screw the four rubber grommets ❶ into the drive ❷.
7. Push the drive into the appropriate keyhole openings ❸ of the mounting bracket ❹ and push to the right (when facing the system) until the locking tab ❺ snaps into place.
8. Connect the drive cables ❻.

Figure 5–5 Installing a Hard-Disk Drive

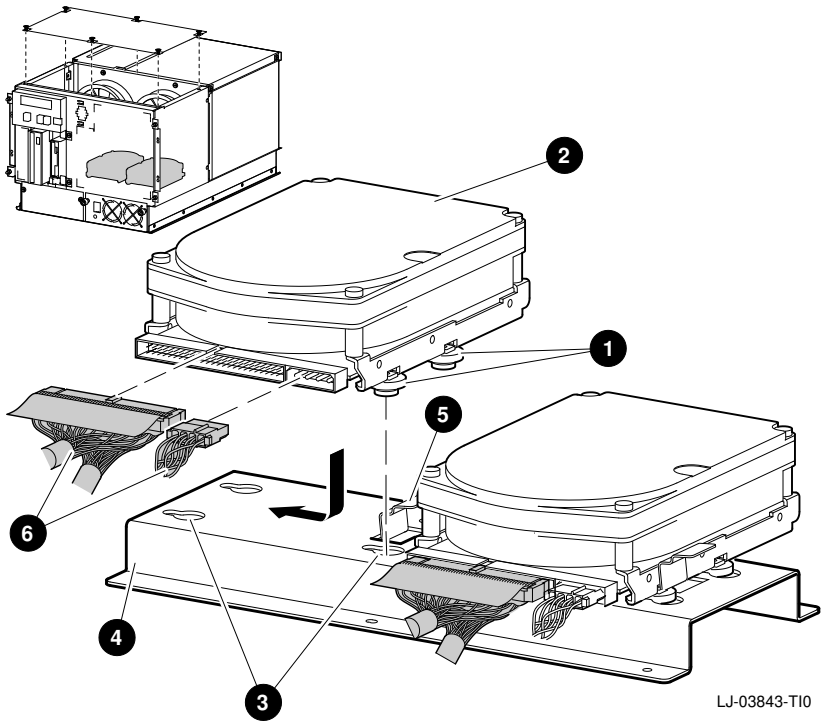

Note

Figure 5–5 shows a rear view of the drives to provide a clear view of the cabling connections.

Power Supply Configurations

The AlphaServer 2100A RM system comes with one power supply. The optional 1000-watt power supply can be added to provide a redundant power supply (see Figure 5–6). With a redundant power supply, in most cases the failure of one power supply does not cause the system to shut down. Normal operation continues with no impact on the system.

The optional power supply kit is offered in two variants:

- H7804-AA — 1000-watt power supply with 120 VAC power cord
- H7804-AB — 1000-watt power supply with 240 VAC power cord

To order a second power supply, call 1-800-DIGITAL. Instructions for installing the second power supply are provided with the power supply kit.

Figure 5–6 Power Supply Configurations

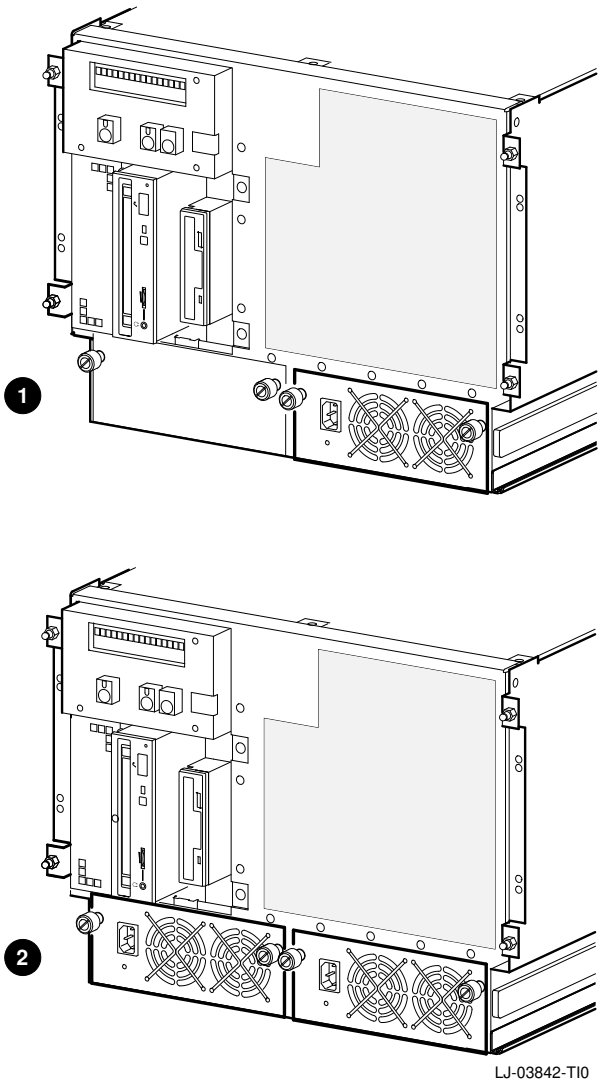

❶ System with a single power supply

❷ System with a redundant power supply

6

Troubleshooting the System

In This Chapter

This chapter provides information to help you identify, report, and troubleshoot problems on your AlphaServer 2100A RM series system. The following types of problems are described:

- Power Problems
- Problems Getting to Console Mode
- Interpreting the OCP Power-Up/Diagnostic Display
- Console Reported Problems
- Mass-Storage Problems Indicated at Power-Up
- EISA Bus Problems Indicated at Power-Up
- PCI Bus Problems Indicated at Power-Up
- Boot Problems
- Operating System Reported Problems
- Fail-Safe Loader (FSL)
- Problems with RAID Devices

Before You Begin

Determine the Service Provider

Before you begin troubleshooting, be sure you are aware of any service agreement for your system. Your service agreement will help you determine how much troubleshooting and repair you should undertake yourself.

- If you are a self-maintenance customer, use the information in this chapter to help identify and resolve the problem. Refer to the *AlphaServer 2000/2100/2100A RM/2100A CAB Series Service Guide* for more comprehensive troubleshooting information.
- If you have a service agreement with Digital or wish to purchase a service agreement, contact a Digital support center for assistance.

Identifying Problems

Use the troubleshooting tables in this chapter to identify problems with your system. You can also run diagnostic tests, using the `test` command and `show fru` command, as described later in this chapter.

Note

If you are running Windows NT, you must switch from the ARC to the SRM console before you can run the `test` command. For information about switching to the SRM console, refer to Chapter 4.

Determining the Type of Problem

Types of System Problems

Determine the type of problem that your system is experiencing from the list in Table 6–1.

Table 6–1 Problem Reference

Problem	Section
The system powers down unexpectedly or does not power up.	Power Problems
The power-up screens are not displayed on the console terminal.	Problems Getting to Console Mode
The power-up screens report an error or do not complete.	Console Reported Problems
The system cannot find the boot device or the device does not boot.	Boot Problems
The operating system startup screen does not appear, software applications do not run, or the operating system reports an error.	Operating System Reported Problems
Any of the following occur: (1) Some RAID devices do not appear on the `show device d` display. (2) Drives on the RAID controller power up with the Fault light on. (3) You cannot access disks connected to the RAID subsystem.	Problems with RAID Devices.

If the system has a problem that is not listed in Table 6–1 or the corrective actions in the troubleshooting tables do not resolve the problem, refer to Reporting Problems.

Reporting Problems

Precall Checklist

If you are unable to locate the system problem in the troubleshooting tables, or the actions suggested do do not resolve the problem, contact the nearest Digital support center. Before calling to report a problem, complete these steps:

1. Locate the part and serial numbers printed on the label at the rear of your system. Record these numbers on a copy of the Problem Worksheet. The Digital support center will need this information when you call.
2. Fill in the ‘‘Status of the System’’ information on the worksheet.
3. Note the problem, possible causes, if you know them, and solutions suggested in the troubleshooting tables. Also indicate what actions (if any) have already been taken to try to correct the problem.
4. Be prepared to read information from the screen and to enter commands at the keyboard while you talk to the Digital support center representative.

Digital Contact Information

Digital Equipment Corporation has support centers in many countries. For service, call 1-800-354-9000 (toll free U.S.A., Canada, or Mexico). You can obtain country-specific contact information from the World Wide Web at http://www.digital.com /info/misc/contacts.txt.html.

AlphaServer 2100A Problem Worksheet

DEC service representative telephone number: _____

Serial Number: _____

Status of the System (check all that apply):

____ DC power light is not on

____ OCP power/diagnostic display failure message

____ Operating system fails to boot

_____ Diagnostic test error message

_____ Console program fails to boot

_____ Console error message

OCP powerup/diagnostic display:

_____

_____

_____

Screen error message:

_____

_____

_____

_____

Troubleshooting notes:

_____

_____

_____

_____

_____

_____

_____

MA00881

Power Problems

Table 6–2 describes how to troubleshoot the system when there is no power at the system enclosure or the power supply subsystem lights indicate power trouble.

Table 6–2 Troubleshooting Power Problems

Symptom	Action
The fans do not spin up when the AC power cable is plugged into the power supply.	Check the power source and the power cord. If there are two power supplies, make sure that both are plugged in.
AC power is present, as indicated by the spinning fans, but the system does not power on.	Check the DC On/Off button setting on the operator control panel. Check that the ambient room temperature is within the environmental specifications (10°C–40°C, 50°F–104°F).
The power supply shuts down after approximately ten (10) seconds.	Check to see if both 6.75-inch fans are operating. A failure of either 6.75-inch fan causes the system to shut down after approximately ten (10) seconds.

Problems Getting to Console Mode

Table 6–3 describes how to troubleshoot the system when powering up the system, but the console terminal does not display the power-up screen.

Table 6–3 Troubleshooting Problems Getting to Console Mode

Symptom	Action
The power-up screen is not displayed.	Check the power-up/diagnostic display on the operator control panel (refer to Table 6–4) for a failure during self-tests. Check that the keyboard and monitor are properly connected and powered on (refer to Chapter 2). If the power-up screen is not displayed, yet the system enters console mode, check that the console environment variable is set correctly. If a graphics monitor is used, set the variable to ''graphics.'' If a serial terminal is used, set the variable to ''serial.'' If `console` is set to ''serial,'' the power-up screen is routed to the COM1 serial communication port and cannot be viewed from the graphics monitor. Try connecting a console terminal to the COM1 serial communication port. If necessary use a 9-pin connector. Check the baud rate setting for the console terminal and system. The system baud rate setting is 9600. When using the COM1 port, set the `console` environment variable to ''serial.''

Interpreting the Operator Control Panel Power-Up/Diagnostic Display

Table 6–4 explains the messages that may appear on the power-up display.

Table 6–4 Interpreting Operator Control Panel Power-Up Display

Message	Meaning
TEST	Displayed while the system performs diagnostic tests and exercisers. The type of module under test, its slot number, and the currently executing test number, are also displayed.
NO MEM INSTALLED	Displayed if you power up with no memory installed.
FAIL *module_type*	If an error is detected in the CPU, memory, or I/O, a failure message is displayed and the Halt button LED lights for a few seconds. The error is logged to the appropriate module via the serial control bus. In nearly all cases, the power-up tests continue. The *module_type* and slot number for the module that failed, along with the test number that detected the error, are also displayed. Module types and/or slot numbers: CPU_nn — CPU module (0, 1, 2, or 3) MEM_nn — Memory module (0, 1, 2, or 3) I/O_0 — I/O backplane or system backplane
CPU STATUS	Summary of CPU testing—The status of each CPU from right to left, starting with CPU0 is displayed: ‘‘P’’ — CPU passed ‘‘F’’ — CPU failed ‘‘–’’ — CPU not present
STARTING CPU #	The console is starting the primary CPU.
CONSOLE STARTED	The SRM console has been unloaded from flash ROM and has assumed control of the system.

(continued on next page)

Table 6–4 (Cont.) Interpreting Operator Control Panel Power-Up Display

Message	Meaning
TEST MEM BANK #	The console is testing memory.
PROBE I/O SUBSYS	The console is checking the PCI and EISA bridges.
SYSTEM RESET	The Reset button has been pressed.
Model n/nnn	When the system is under operating system control, the CPU variant (*n*) and system model number (*nnn*) are displayed unless you supply your own text using the ocp_ text environment variable.
21164 TIMEOUT	An Alpha 21164 microprocessor IBOX time-out occurred.
3.3V/CLOCK FAIL	A voltage or clock failure occurred on the CPU module.
MEM_yy NVR ERROR	A checksum error occurred in the memory NVRAM.

CPU Failover

AlphaServer 2100A RM multiprocessor systems offer high-availability ‘‘failover’’ functionality. This feature allows the system to power up and boot the operating system in case of a CPU failure.

How Failover Works

When you power up or reset a multiprocessor system, each CPU, in parallel, runs a set of diagnostic tests. If any tests fail, errors are logged, and the failing CPU is configured out of the system. Responsibility for initializing memory and booting the console firmware is transferred to the next higher working CPU, and the boot process continues.

Messages on the operator control panel power-up/diagnostic display indicate the status of failed components. The CPU number of the CPU serving as the primary CPU is displayed in the SRM console prompt; for example, `P01>>>`.

How to Determine the Status of CPU Tests

If a CPU fails during power-up, the Halt button LED on the operator control panel lights for a few seconds, and the power-up/diagnostic display CPU STATUS message shows the failing CPU (‘‘F’’ indicates failure).

You can also use the following SRM firmware commands to examine the status of CPU tests or to see if errors are logged to a CPU.

- `show fru`, described in the next section.
- `show config`, described in the *AlphaServer 2100A Owner's Guide*.

Fail-Safe Loader (FSL)

The AlphaServer 2100A system has redundant or backup ROM called the ‘‘fail-safe loader’’ (FSL) that is activated under the following circumstances:

- If the SRM console firmware is corrupted, for example as a result of a failed firmware update.
- If a hardware failure during power-up prevents the console firmware from loading.
- If there is a configuration error, such as an incorrect environment variable setting or an inappropriate nvram script.
- If the FSL enable switch is activated.

Automatic Activation

If the SRM console firmware is corrupted, the FSL is automatically loaded into memory. The system power-up display appears, followed by the FSL prompt:

```
AlphaServer 2100 Console T4.3-30, built on Sep 12 1995
at 15:38:55
ash>
```

Also, the power-up/diagnostic display on the operator control panel displays a FAIL I/O_04 message. At the `ash>` prompt, reinstall the console firmware files, using your latest firmware update media.

Manual Activation

If necessary, you can activate the FSL manually as follows:

1. Make sure the system is off.
2. Locate the two FSL switches on the backplane Figure 6–1.
3. Using a small flat implement, push the FSL enable switch (top switch) to the right (enabled).
4. Power on the system.
5. Perform limited commands from the FSL console, as described in Using the FSL.
6. When you have finished, power down the system and push the FSL enable switch to the left (disabled).

The fail-safe loader switches function as follows:

- The FSL enable switch (top switch) selects the FSL firmware.
- The FSL console update switch (bottom switch) allows writes to the fail-safe loader and is used to update the fail-safe loader firmware during a firmware upgrade.

Figure 6–1 Location of FSL Switches

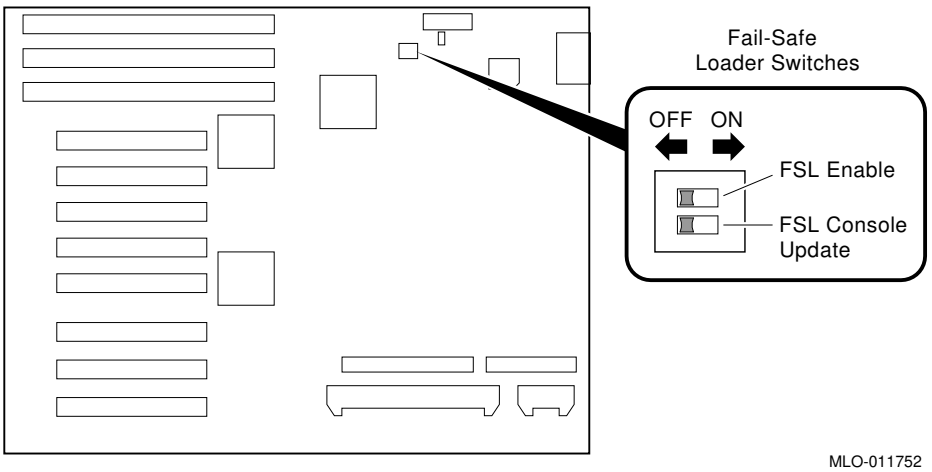

Using the FSL

From the FSL console `ash>` prompt, you can make corrections to environment variables, edit the ''nvram'' file, or initialize drivers so that you can perform a firmware update.

To assign a correct value to an environment variable, use the `show` and `set` commands, as described in the *AlphaServer 2000 /2100/2100A Firmware Reference Guide*.

To edit the ''nvram'' file, use the `edit` command. The ''nvram'' file is a user-defined power-up script that is always invoked during the power-up sequence. The ''nvram'' file and the `edit` command are described in the *AlphaServer 2000/2100/2100A Firmware Reference Guide*.

To initialize all available drivers and boot updated firmware, enter the following commands. Substitute the name of the update file for the variable *update_file*.

```
ash> init -driver 6
ash> boot update_file
```

Caution

If you have manually activated the FSL by pushing the FSL enable switch on the system backplane to the right, you must push the FSL enable switch to the left (disable) before performing the firmware update.

Updating the FSL

When you perform a system upgrade, such as replacing your existing CPUs with faster CPUs, you should update the fail-safe loader. Instructions for updating the FSL are provided with system upgrade kits.

Console Reported Problems

Table 6–5 describes how to troubleshoot the system when self-tests do not complete or when error messages are displayed on your console terminal in console mode.

Table 6–5 Troubleshooting Problems Reported by the Console Program

Symptom	Action
The power-up tests do not complete.	Use the power-up/diagnostic display on the OCP (refer to Table 6–4).
The system powers up to the `ash>` prompt.	Reinstall the firmware. Refer to the firmware update documentation for firmware installation instructions. Contact your Digital support center if there is no backup copy of the firmware.
The console program reports an error.	Use the power-up/diagnostic display on the OCP (refer to Table 6–4) to determine the error.
• The OCP displays failure message at power-up.	Use the `show fru` command described in the next section to see if errors have been logged.
• The Halt button LED lights during power-up.	Examine the console event log (enter the `more el` command) or power-up screens to check for embedded error messages recorded during power-up.
• The power-up screen includes error messages.	If the power-up screens or the console event log indicate problems with mass-storage devices, or if the storage devices are missing from the `show config` display, use the troubleshooting flowcharts (refer to Table 6–6 and Table 6–7) to determine the problem.
	If the power-up screens or the console event log indicate problems with the EISA devices, or if the EISA devices are missing from the `show config` display, use the troubleshooting flowchart (refer to Table 6–8) to determine the problem.
	If the power-up screens or the console event log indicate problems with the PCI devices, or if the PCI devices are missing from the `show config` display, use the troubleshooting flowchart (refer to Table 6–9) to determine the problem.

(continued on next page)

Table 6–5 (Cont.) Troubleshooting Problems Reported by the Console Program

Symptom	Action
	Run the `test` command (refer to the test section in this chapter) to verify the problem.

show fru

The `show fru` command reports module and error information for the following field replaceable units (FRUs) based on the serial control bus EEPROM data:

- CPU modules
- Memory modules
- I/O modules

For each of the above modules, the slot position, option name, part number, hardware and firmware revision, and option serial number, as well as any reported symptom-directed diagnostics (SDD) and test-directed diagnostics (TDD) event logs, are displayed. In addition, installed PCI and EISA modules are displayed with their respective slot numbers.

Synopsis:

show fru

Examples:

```
P00>>> show fru
  ❶    ❷      ❸                ❹        ❺              ❻
                                 Rev                     Events logged

                                 Rev                     Events logged
 Slot   Option  Part#           Hw Sw   Serial#         SDD     TDD
   0    IO      B2222-AA        B2 0    NI53400099      00      00
   2    CPU0    B2020-AA        B2 10   KA426C0457      00      00
   4    MEM0    B2021-CA        A1 0    ML34398735      00      00

 Slot   Option                  Hose 0, Bus 1, PCI on Primary I/O
   9    DECchip 21050-AA                                PCI Option Slot 3
 Slot   Option                  Hose 0, Bus 0, PCI on Primary I/O
   8    S3 Trio64/Trio32                                PCI Option Slot 6

 Slot   Option                  Hose 0, Bus 1, EISA on Primary I/O
P00>>>
```

❶ System bus physical slot number for FRU (slots 0–7 top to bottom)

- Slot 0: I/O backplane (dedicated EISA/PCI card cage slot)
- Slot 1–3, 5: CPU modules
- Slot 4–7: Memory modules

❷ Option name (I/O, CPU#, or MEM#)

❸ Option part number

❹ Revision numbers (hardware and firmware)

❺ Option serial number

❻ Events logged:

Numbers other than ‘‘00’’ indicate that errors have been logged.

- SDD: Number of symptom-directed diagnostic events logged by the serial ROM diagnostics at power-up.
- TDD: Number of test-directed diagnostic events logged by the firmware diagnostics at power-up.

test

The `test` command runs firmware diagnostics for the entire ‘‘core’’ system. The tests are run sequentially and the status of each subsystem test is displayed on the console terminal as the tests progress. If a particular device is not available to test, a message is displayed.

Note

By default, no write tests are performed on disk and tape drives. Media must be installed to test the floppy drive and tape drives.

The `test` script tests devices in the following order:

1. Memory tests (one pass)
2. Read-only tests: DK* disks, DR* disks, DU* disks, DV* floppy, MK* tapes, MU* tapes.
3. Console loopback tests if lb (loopback) argument is specified: COM2 serial port and parallel port.

4. VGA console tests—These tests are run only if the graphics monitor is not used as the console terminal; that is, the console environment variable is set to ‘‘serial.’’ The VGA console test displays rows of the word ‘‘Digital.’’
5. Network external loopback tests for EWA0—This test requires that the Ethernet port be terminated or connected to a live network, otherwise, the test will fail.

Synopsis:

test [lb]

Arguments:

[lb]	The loopback option includes console loopback tests for the COM2 serial port and the parallel port during the test sequence.

Example 1:

In this example, the system is tested, and the tests complete successfully.

```
P00>>> test

Testing the Memory
Testing the DK* Disks(read only)
dkb600.6.0.2.1 has no media present or is disabled via the RUN/STOP
switch
file open failed for dkb600.6.0.2.1
No DR* Disks available for testing
Testing the MK* Tapes(read only)
Testing the DV* Floppy Disks(read only)
file open failed for dva0.0.0.0.1
Testing the VGA(Alphanumeric Mode only)
Testing the EW* Network
P00>>>
```

Example 2:

In this example, the system is tested, and the system reports an error message. No network server responded to a loopback message. Ethernet connectivity on this system should be checked.

```
P00>>> test

Testing the Memory
Testing the DK* Disks(read only)
No DR* Disks available for testing
Testing the MK* Tapes(read only)
Testing the DV* Floppy Disks(read only)
file open failed for dva0.0.0.0.1
Testing the VGA(Alphanumeric Mode only)
Testing the EW* Network

*** Error (ewa0), Mop loop message timed out
from: 08-00-2b-3b-42-fd

*** List index: 7 received count: 0 expected count: 2
P00>>>
```

Mass-Storage Problems Indicated at Power-Up

Mass-storage failures at power-up are usually indicated by read fail messages.

Table 6–6 provides information for troubleshooting fixed-media mass-storage problems indicated at power-up.

Table 6–7 provides information for troubleshooting removable-media mass-storage problems indicated at power-up.

Table 6–6 Fixed-Media Mass-Storage Problems

Problem	Symptom	Action
A drive failure	The fault LED for the drive is on (steady).	Replace the drive.
There are duplicate SCSI ID(s) (when removable-media bus is extended to StorageWorks shelf).	The drives with duplicate SCSI IDs are missing from the `show config` display.	Correct the removable-media SCSI IDs.
The SCSI ID(s) is set to 7 (reserved for host ID).	The valid drives are missing from the `show config` display. One drive may appear seven (7) times on the `show config` display.	Correct the SCSI IDs.
There are duplicate host ID(s) on a shared bus.	The valid drives are missing from the `show config` display. One drive may appear seven (7) times on the `show config` display.	Change the host ID(s) using the `set pk*0_host_id` command described in the *AlphaServer 2000 /2100/2100A Firmware Reference Guide*.
An I/O module failure (if removable-media bus is extended to StorageWorks shelf) or PCI or EISA storage adapter option failure.	Problems persist after eliminating the previous problem sources.	Replace the storage adapter module or system backplane.

Table 6–7 Removable-Media Mass-Storage Problems

Problem	Symptom	Action
A drive failure.	The fault LED for the drive is on (steady).	Replace the drive.
There are duplicate SCSI ID(s).	The drives with duplicate SCSI IDs are missing from the `show config` display.	Correct the SCSI IDs.
The SCSI ID(s) is set to 7 (reserved for host ID).	The valid drives are missing from the `show config` display. One drive may appear seven (7) times on the `show config` display.	Correct the SCSI IDs.
There are duplicate host ID(s) on a shared bus.	The valid drives are missing from the `show config` display. One drive may appear seven (7) times on the `show config` display.	Change the host ID(s) using the `set pk*0_host_id` command described in the *AlphaServer 2000 /2100/2100A Firmware Reference Guide*.
There are missing or loose cables.	The activity LEDs do not come on. The drive is missing from the `show config` display.	Remove the device and inspect the cable connections.
A terminator(s) is missing.	There are read/write errors in the console event log; the storage adapter port may fail.	Attach terminators as needed: internal SCSI terminator (12-41296-01) or external SCSI terminator (12-37004-04).
There is an extra terminator.	Devices produce errors or device IDs are dropped.	Check that only the beginning and the end of the SCSI bus is terminated. Remove the unnecessary terminators.
There is an I/O module failure.	Problems persist after eliminating the previous problem sources.	Replace the I/O backplane.

EISA Bus Problems Indicated at Power-Up

EISA bus failures at power-up are usually indicated by the following messages displayed during power-up:

```
EISA Configuration Error. Run the EISA Configuration
Utility.
```

Run the ECU as explained in the *AlphaServer 2100A Owner's Guide* when such a message is displayed. Other problems are indicated by EISA devices missing from the `show config` display.

Table 6–8 provides information for troubleshooting EISA bus problems that persist after running the ECU.

Table 6–8 EISA Troubleshooting

Step	Action
1	Confirm that the EISA module and any cabling are properly seated.
2	Run the ECU to: • Confirm that the system has been configured with the most recently installed controller. • See what the hardware jumper and switch setting should be for each ISA controller. • See what the software setting should be for each ISA and EISA controller. • See if the ECU deactivated any controllers to prevent a conflict. Deactivation is indicated by angle brackets (<>). • See if any controllers are locked, which limits the ECU's ability to change resource assignments. Locked controllers are indicated by an exclamation mark (!).
3	Confirm that the hardware jumpers and switches on ISA controllers reflect the settings indicated by the ECU. Start with the last ISA module installed.
4	Check for a bad slot by moving the last installed controller to a different slot.
5	Call the option manufacturer or the Digital support center for help.

Additional EISA Troubleshooting Tips

The following tips can aid in isolating EISA bus problems:

- Peripheral device controllers need to be seated (inserted) carefully, but firmly, into their slot to make all necessary contacts. Improper seating is a common source of problems for EISA modules.
- The CFG files supplied with the option that you want to install may not work on the AlphaServer 2100A RM series system. Some CFG files call overlay files that are not required on this system or may reference inappropriate system resources, for example, BIOS addresses. Contact the option vendor to obtain the proper CFG file.
- Peripherals cannot share direct memory access (DMA) channels. Assignment of more than one peripheral to the same DMA channel can cause unpredictable results or even loss of function of the EISA module.
- Systems running Windows NT can assign shared interrupt lines (IRQs). Digital UNIX and OpenVMS do not allow shared interrupts.
- Not all EISA products work together. EISA is an open standard, and not every EISA product or combination of products can be tested. Violations of specifications may not matter in some configurations, but matter in others.

  Manufacturers of EISA options often test the most common combinations and may have a list of ISA and EISA options that do not function in combination with particular systems. Be sure to check the documentation or contact the option vendor for the most up-to-date information.
- EISA systems will not function unless they are first configured using the ECU.
- The ECU will not notify you if the configuration program diskette is write-protected when it attempts to write the system configuration file (system.sci) to the diskette.

PCI Bus Problems Indicated at Power-Up

PCI bus failures at power-up are usually indicated by the inability of the system to see the device. Use Table 6–9 to diagnose the likely cause of the problem.

Table 6–9 PCI Troubleshooting

Step	Action
1	Confirm that the PCI module and any cabling are properly seated.
2	Check for a bad slot by moving the last installed controller to a different slot.
3	Call the option manufacturer or the Digital support center for help.

Boot Problems

This section describes how to troubleshoot problems that occur while the system is booting the operating system software.

Table 6–10 describes possible problems during booting and their corrective actions.

Table 6–10 Troubleshooting Boot Problems

Symptom	Action
The system cannot find the boot device.	Check the system configuration for the correct device parameters (node ID, device name, and so on).
	Digital UNIX and OpenVMS: Use the `show config` and `show device` commands.
	Windows NT: Use the Display hardware configuration selection and the Set default environment variables selection.
	Check the system configuration for the correct environment variable settings.
	Digital UNIX and OpenVMS: Examine the `auto_action`, `bootdef_dev`, `boot_osflags`, and `os_type` environment variables.
	For problems booting over a network, check the ew*0_protocols environment variable setting. Set to bootp if booting from Digital UNIX. Set to mop if booting from OpenVMS.
	Windows NT: Examine the FWSEARCHPATH, AUTOLOAD, and COUNTDOWN environment varibles.
The device does not boot.	For problems booting over a network, check the ew*0_protocols environment variable setting. Set to bootp if booting from Digital UNIX. Set to mop if booting from OpenVMS.
	Run the `test` command to check that the boot device is operating.

Operating System Reported Problems

This section describes how to troubleshoot system problems that occur while the operating system software is up and running.

Table 6–11 describes possible operating system problems and their corrective actions.

Table 6–11 Troubleshooting Errors Reported by the Operating System

Symptom	Action
The system is hung or has crashed.	Examine the crash dump file. Refer to the *OpenVMS AXP Alpha System Dump Analyzer Utility Manual* for information on how to interpret OpenVMS crash dump files. Refer to the *Guide to Kernel Debugging* for information on using the Digital UNIX Krash Utility.
The operating system is running.	Have the Digital support center examine the operating system error log files to isolate the problem. Self-maintenance customers can refer to the *AlphaServer 2000/2100/2100A RM/2100A CAB Series Service Guide*. If the problem occurs intermittently, have the Digital support center run an operating system exerciser, such as the DEC VET, to stress the system. Refer to the *DEC Verifier and Exerciser Tool User's Guide* for instructions on running DEC VET.

Problems with RAID Devices

Table 6–12 provides troubleshooting hints for AlphaServer 2100A RM series system that have the StorageWorks RAID Array 200 Subsystem. The RAID subsystem includes either the KZESC-*xx* (SWXCR-E*x*) EISA or the KZPSC-*xx* (SWXCR-P*x*) PCI RAID controller.

Table 6–12 Troubleshooting RAID Problems

Symptom	Action
Some RAID drives do not appear on the `show device d` display.	Valid configured RAID logical drives will appear as DRA0–DRA*n*, not as DK*n*. Configure the drives by running the standalone configuration utility, following the instructions in the *StorageWorks RAID Array 200 Subsystems Controller Installation and Standalone Configuration Utility User's Guide*, EK-SWRA2-IG. Reminder: several physical disks can be grouped as a single logical DRA*n* device.
Drives on the RAID subsystem power up with the amber Fault light on.	Whenever you move drives onto or off of the controller, run the standalone configuration utility to set up the drives and logical units. Follow the instructions in the *StorageWorks RAID Array 200 Subsystems Controller Installation and Standalone Configuration Utility User's Guide*.
Cannot access disks connected to the RAID subsystem on Windows NT systems.	On Windows NT systems, disks connected to the controller must be spun up before they can be accessed. While running the ECU, verify that the controller is set to spin up two disks every six seconds. This is the default setting if you are using the default configuration files for the controller. If the settings are different, adjust them as needed.

Index

A

AC power connector
  location of, 1–6
Access door, left side, 1–12
Accessories kit
  English RETMA
    contents of, 3–6
Adapter
  Fast SCSI-2, 5–5
Alignment
  slides to cabinet, 3–24
ARC interface
  switching to SRM from, 4–19
Attaching slides, 3–20

B

Boot problems
  troubleshooting, 6–27
Bus
  expansion of, 3–38
  system, 5–2

C

Cabinet
  stability of, 3–15
Cable management system
  cable routing, 3–33
  installation of, 3–31
Cable routing, 3–33
Cabling RAID controller, 5–6
CFG files, 6–25
COM2 and parallel port
  loopback tests, 6–17
Configuration
  console port, 4–12
Configuration rules
  removable-media, 5–8
Console
  diagnostic flow, 6–7
Console commands
  show fru, 6–15
  test, 6–17
Console device, connecting, 4–5
console environment variable, 4–12
Console mode
  defined, 4–23
  invoking, 4–23
  invoking remotely, 4–23
  invoking with Halt button, 4–23
  problems, troubleshooting, 6–7, 6–14
  prompt, 4–23
  troubleshooting, 6–14
Console port configurations, 4–12
Console prompt, 4–23
  SRM console, 4–16
Console terminal, 4–23
Console, invoking
  See Console mode, 4–23
Consoles
  switching between ARC and SRM, 4–19
Controls, accessing, 1–5

CPU failover, 6–10
CPU modules
  installation requirements, 5–3
  location of, 5–2
  SMP configuration and, 5–3
Customer support, 6–4

D

DC On/Off button, 1–8
DC On/Off light, 1–8
Door, OCP
  unlocking, 1–10
DSSI controller, cabling, 5–6
Dual power supply (redundant), 5–12

E

EISA bus
  location of, 5–2
  problems at power-up, 6–23
  troubleshooting, 6–23
  troubleshooting tips, 6–25
EISA I/O boards
  location of, 1–12
English RETMA
  rail-hole pattern, 3–16
Errors
  commands to report, 6–15
Ethernet
  external loopback, 6–17
Extender cables, installing, 3–35

F

Fail-safe loader, 6–11
Failover, CPU, 6–10
Fast SCSI-2 controller, 5–5
Fixed-media
  storage problems, 6–20
Front bezel
  installation of, 3–39
FRUs
  commands to report errors, 6–15

G

Guidelines
  cable routing, 3–33

H

Halt button
  invoking console mode with, 1–8
  invoking operating system mode with, 1–8
Hangs
  using Reset button to recover from, 1–9
Hardware specifications, 2–1

I

I/O boards
  EISA, location of, 1–12
  PCI, location of, 1–12
Installation
  attaching the slides, 3–12, 3–20
  cable management system, 3–31
  checking contents of shipment, 3–5
  front bezel, 3–39
  interlock actuator bracket, 3–26
  interlock actuator latches, 3–28
  power cords, 3–14
  system slides, 3–8
  tools required, 3–2
Installation area
  English RETMA rail-hole pattern, 3–16
  metric RETMA rail-hole pattern, 3–18
Interlock actuator bracket, installation of, 3–26
Interlock actuator latches, installation of, 3–28
Interlock system, 3–26
Internal SCSI bus, 5–5
Interrupt lines
  and EISA, 6–25
IRQs
  and EISA, 6–25

J

Jumpers, on system backplane, 2–3

K

Keyboard extender cable, installing, 3–35

L

Loopback tests
  COM2 and parallel ports, 6–17

M

Mass storage
  described, 5–5
  problems, troubleshooting, 6–20, 6–22
Memory modules, 5–4
  location of, 5–2
Metric RETMA
  rail-hole pattern, 3–18
Modem, connecting, 4–5
Mouse extender cable, installing, 3–35

N

Network options, 4–7

O

Operating system
  boot failures, reporting, 6–28
Operating system problems
  troubleshooting, 6–28
Operator control panel
  controls
    location of, 1–6
  display, interpreting, 6–8
  Halt button, 1–8
  Halt light, 1–8
  location of, 1–6
  Reset button, 1–9

P

PCI bus
  location of, 5–2
  troubleshooting, 6–26
PCI I/O boards
  location of, 1–12
Peripheral devices, connecting, 4–5
Power controllers, CAB system, 2–13
Power cords
  installation of, 3–14
  types of, 2–12
Power problems
  troubleshooting, 6–6
Power requirements, 2–10
Power supplies
  location of, 1–6
Power supply configurations, 5–12
Power-down procedure
  turning off DC power, 4–20
Power-up display
  interpreting, 6–8
Power-up sequence
  mass-storage failures, 6–20
  PCI failures, 6–26
Power-up/diagnostic display, 4–13
Powerdown procedure, 4–20
Printer, connecting, 4–5
Problem reporting, 6–4
Problems
  See Troubleshooting
  determining type, 6–3
  identifying, 6–1

R

RAID controller, cabling, 5–6
RAID problems, 6–29
Rail-hole pattern
  English RETMA, 3–16
  metric RETMA, 3–18
Rails
  attaching slides to, 3–20

Redundant power, 5–12
Removable-media
storage problems, 6–22
Removable-media compartments
configuration rules, 5–8
Removable-media devices
SCSI support for, 5–5
Reset button
for recovering from hangs, 1–9

S

SCSI bus
expansion of, 3–38
internal, 5–5
set tga_sync_green command (SRM), 4–4
Shipment
checking contents of, 3–5
show fru command (SRM), 6–15
Site preparation, verifying, 3–3
Slides
alignment of, 3–24
preparation of, 3–8
SMP configuration
CPU modules, 5–3
Specifications
dimensions, 2–4
electrical, 2–5
environmental, 2–8
Stability
cabinet, 3–15
Switches, on system backplane, 2–3
System
before installing the, 3–2
expansion of SCSI, 3–38
slide mounting, 3–22
turning off, 4–20
turning on, 4–8
System bus, location of, 5–2
System components
front, 1–6
System keys, locating, 1–5
System slides
installation of, 3–8
System startup screen, 4–13

T

test command, 6–17
TGA monitor, synchronizing, 4–4
Tools required, 3–2
Troubleshooting, 6–1
boot problems, 6–27
console, 6–7
console mode problems, 6–14
EISA problems, 6–23
errors reported by operating system, 6–28
for self-maintenance customers, 6–2
interpreting the operator control panel power-up display, 6–8
mass-storage problems, 6–20
operating system problems, 6–28
PCI problems, 6–26
power problems, 6–6
problem reference, 6–3
problem worksheet, 6–5
problems getting to console mode, 6–7
problems reported by the console, 6–14
RAID problems, 6–29
reporting problems, 6–4
test command, 6–2

V

VGA extender cable, installing, 3–35